Problem 7-20

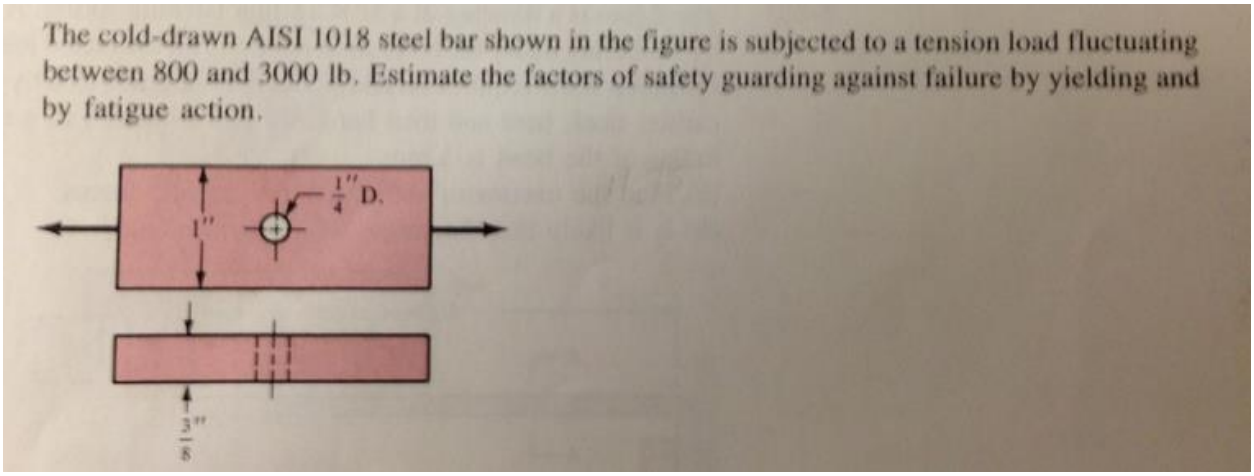
The cold-drawn AISI 1018 steel bar shown in the figure is subjected to a tension load fluctuating between 800 and 3000 lb. Estimate the factors of safety guarding against failure by yielding and by fatigue action.

(From Shigley and Mischke Mechanical Engineering Design)

Start by building the part shown in problem 7-20 in the textbook, make sure you are in English (IPS) units.

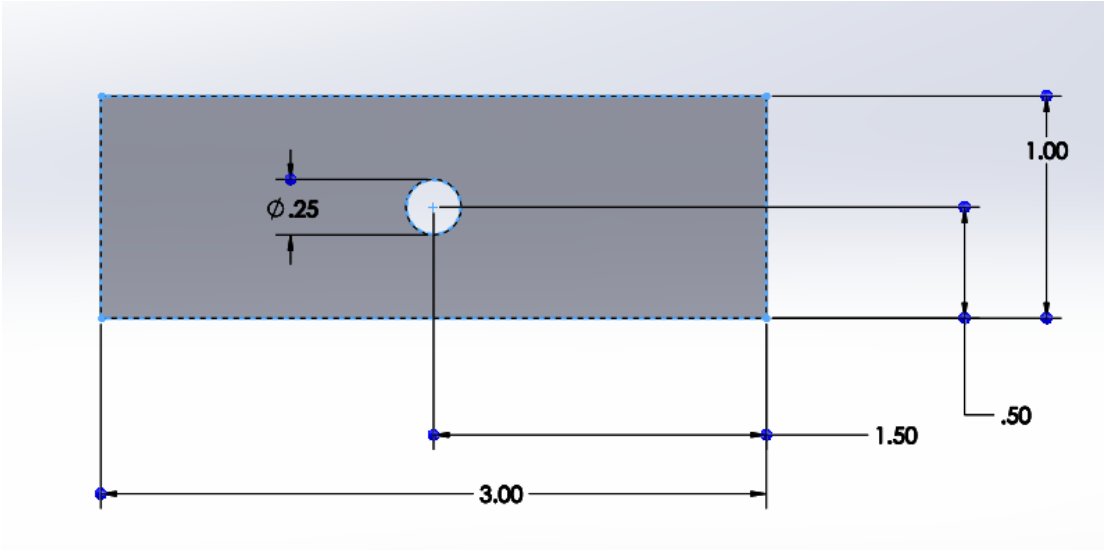

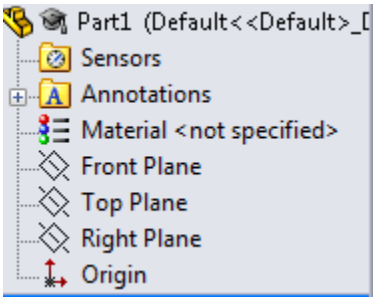

Next, apply a material by right clicking on the “material<not specified>” tab in the design tree, and selecting a material.

You’ll notice that AISI1018 CD Steel is not listed, therefore, for this example choose “AISI 1020 Steel, Cold Drawn” when you click this material, the material properties should be shown in the window, make sure you select English units.

Once this is done, go up to the “tools” drop down menu and select “add-ins,” the following window should pop up:

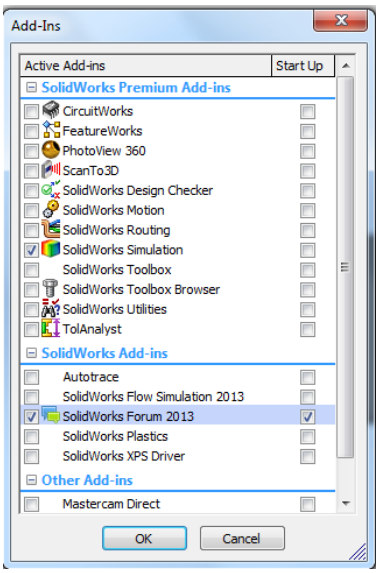

Check the “SolidWorks Simulation” box on the left and then click ok.

A new tab should appear at the top of the design space that says “Simulation.” Click the tab and under “Study” select “New Study”

In the property manager, “study” should appear, and will give you the options to name your study and select the type of study.

Name the study “Static 7-20” and select “Static.” For this example we will not be running the fatigue simulation, but if you were to run the fatigue simulation, it is very important that you first run the static test, then run a fatigue simulation after the static simulation.

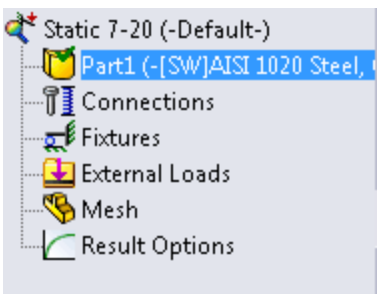

You should now have something similar to what is shown in the image on the right, appearing below the design tree.

We must first apply a fixture to the geometry. Do this by right clicking on “Fixtures” then selecting “Fixed Geometry.”

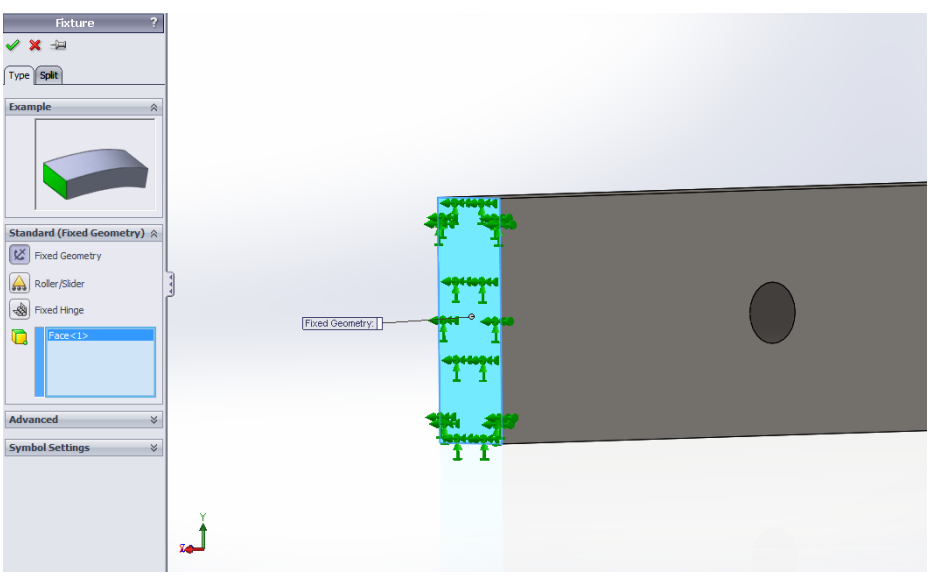

There will be a few different options available, but the standard “fixed Geometry” is what we will be using, so select one side of the plate to be fixed, as shown in the image above, and then click the green check mark.

Now, we need to apply an external load, do this by right clicking on “External Loads” then selecting “Force.” For this example select the maximum tensile load of 3000lb, as stated in the problem. Be sure that you are in English units, and then select the appropriate face to apply the force to (click the “reverse direction” box if necessary). Your part should look similar to the image below:

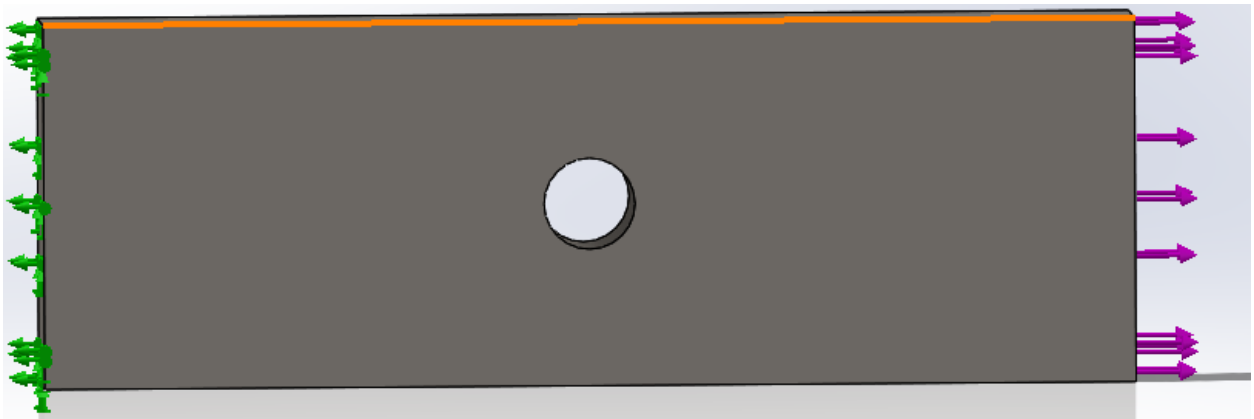

Now that we have defined the forces and fixtures, we can apply a mesh to the part. Do this by right clicking “Mesh” then selecting “Create Mesh.” In the property manager, “Mesh Density” should appear allowing you to adjust the mesh size from “coarse” to “fine.” Leave the density at the default setting (near the middle) and click the green check mark.

You should now have a fully meshed part, and are ready to run the simulation.

Right click the name of your study (Static 7-20) and select “Run.”

After running the simulation, you should have some pretty colors on your plot, and a results tab under your study.

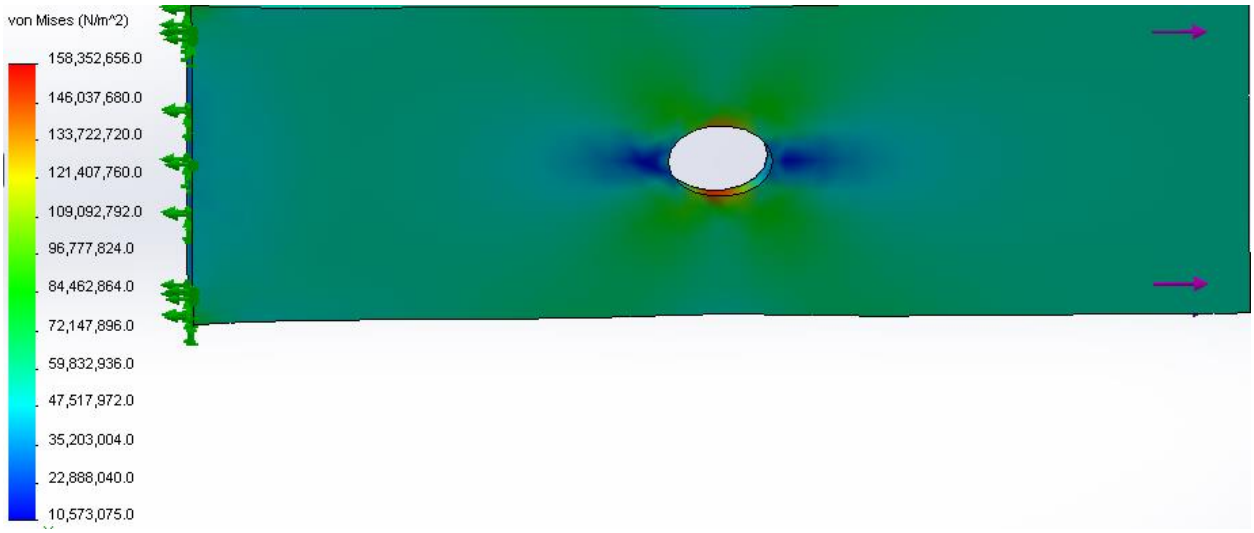

In order to confirm that are results are accurate, we must do a mesh convergence test. Essentially, we need to re-run the simulation with a finer mesh and if the results match from the previous simulation, we are in good shape, if they differ by a significant amount, something is wrong with your simulation.

We are not doing anything really complicated, so go ahead and create a new mesh and re-run the simulation. This provides a slightly different answer, but nothing too unreasonable so the model should be fairly accurate.

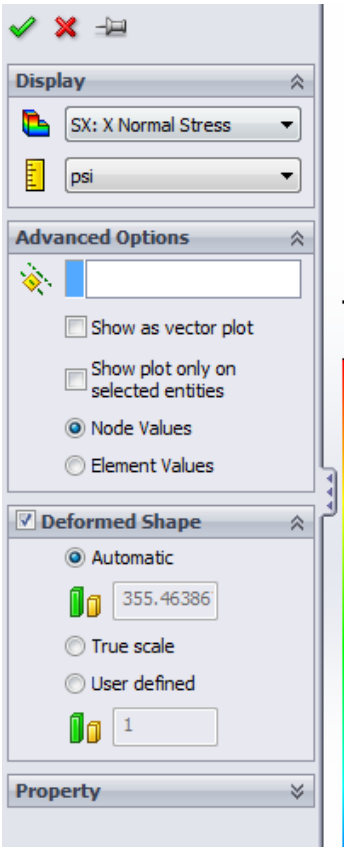

The goal of this simulation is to compare your TK code for problem 7-20, and verify the stress concentration factors are correct, so let's get started on that.

Under the results section you will notice the default stress plot shown is Von Mises stress. For this problem we were mainly interested in the normal stress in the X direction. We can add a plot to our results section that contains this stress by right clicking the "Results" tab and selecting "Define Stress Plot…"

From here, select X Normal Stress, and set your units to psi.

Once you have this plot up, you can click the simulation tab at the top, select "plot tools" and then "Probe." This will allow you to use the mouse, and click specific points of interest. Note - this will only select points where nodes exist, so do not expect to be able to probe absolutely anywhere. If you need more nodes, you can increase the mesh density, which was shown earlier.

The results of the new study are shown below.

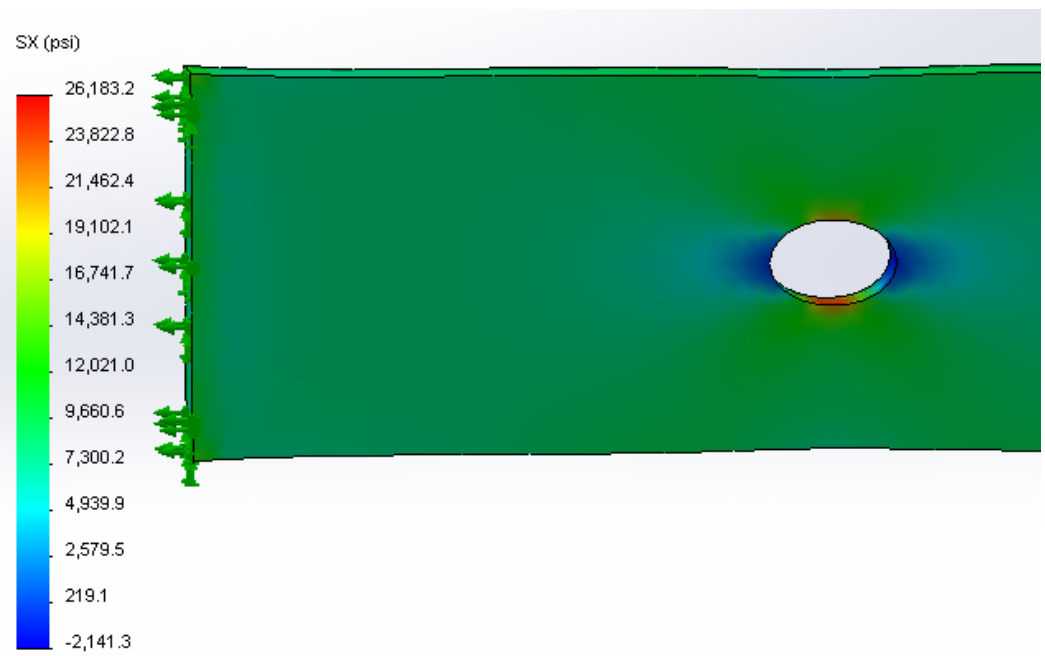

According to the simulation, the maximum stress in the X direction occurs at the very edge of the hole, and has a magnitude of about 26ksi. Why does this not match the maximum stress calculated in your TK code? Is this value from the simulation wildly inaccurate? (Hint: read section 7-11 in your textbook!)

ANSWER:

The reason the maximum stress in the TK code does not match this value is because the stress found in TK is only the nominal stress. The stress concentration is not applied to the static load in this problem because it is used in the Marin equation when calculating the endurance limit.

According to the textbook, the maximum stress is equal to the nominal stress (F/A) multiplied by the fatigue stress concentration factor (K_f). However, since we are just evaluating the static load, the maximum normal stress is equal to the nominal stress multiplied by the theoretical stress concentration factor.

This can be verified by Metal Fatigue in Engineering by Stephens, Stephens, Fatemi, and Fuchs.

Another solution I found online,
http://www.ewp.rpi.edu/hartford/~ernesto/Su2012/EP/MaterialsforStudents/Aiello/Roark-Ch06.pdf

From my TK code and the Shigley and Mischke textbook's appendix, I have a theoretical stress concentration factor of 2.43. This yields a maximum stress of 25.9ksi, which is dangerously close to SolidWorks' value (about 26.2ksi) thereby verifying the plots for K_t used in the appendix of the textbook.