1. Open the part “base” in a new assembly. Create the coordinate system shown below. What is the center of mass of the assembly with respect to coordinate system 1?

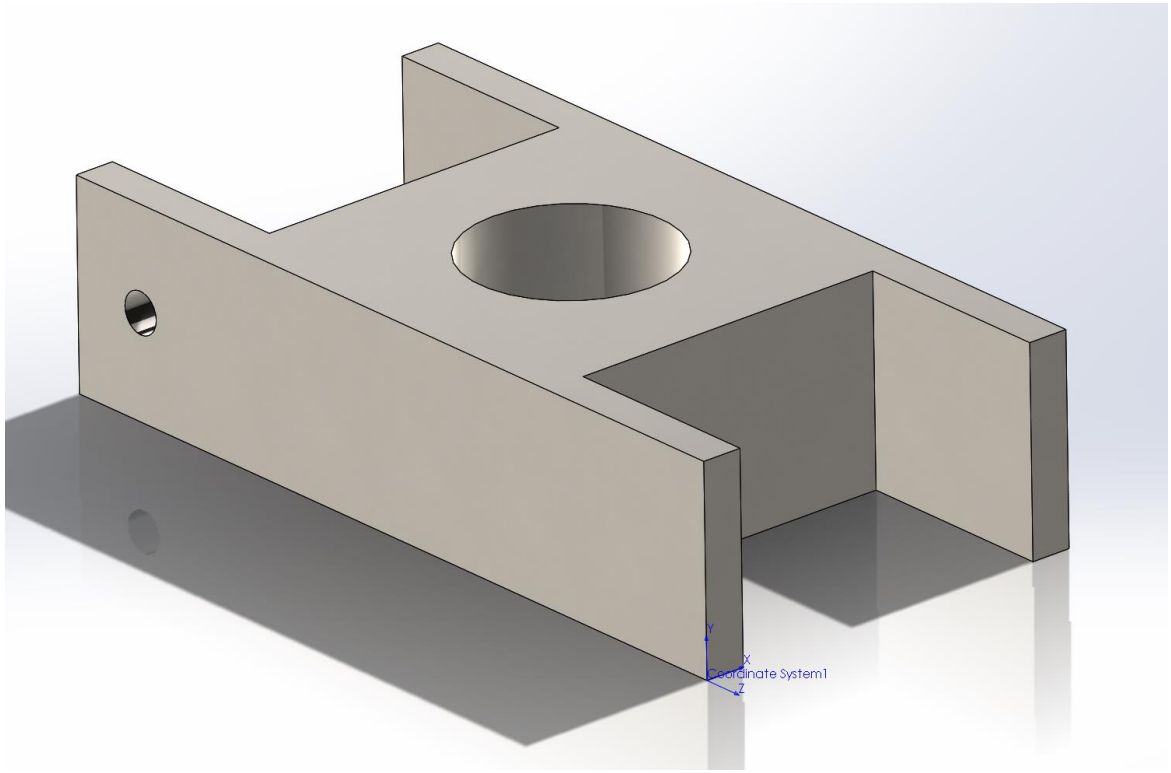

X: 25.00 mm

Y: 12.50 mm

Z: -49.87 mm

2. Create a new assembly from “base”. Insert the part called “arm” and create the mates shown below. Turn on collision detection. Move the arm to either side to observe detection.

   Note: Collision detection is found under “options” for move component. Make sure to check the “stop at collision box”.

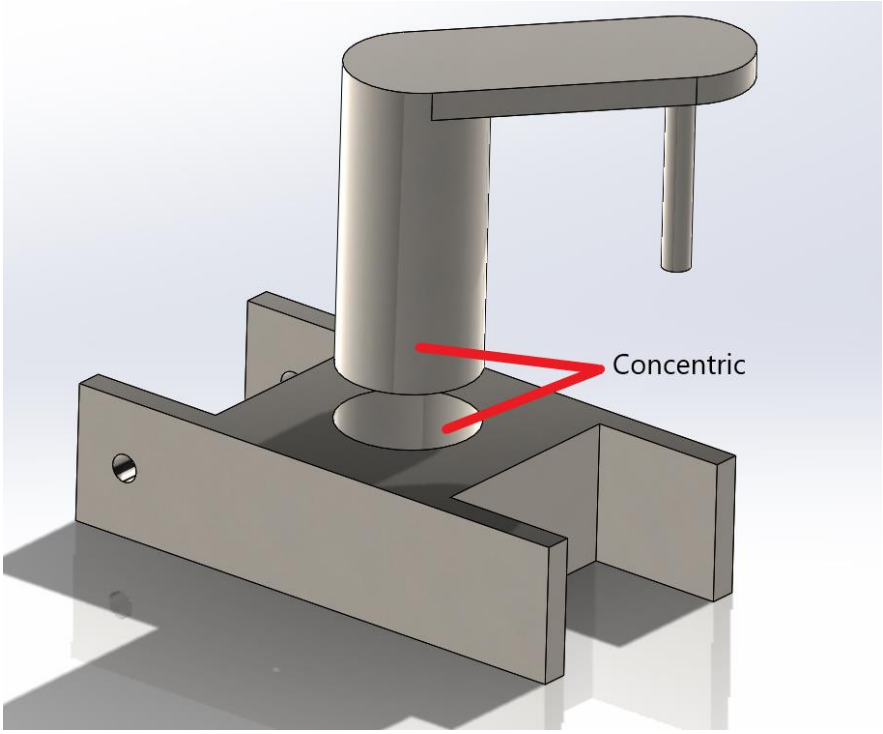

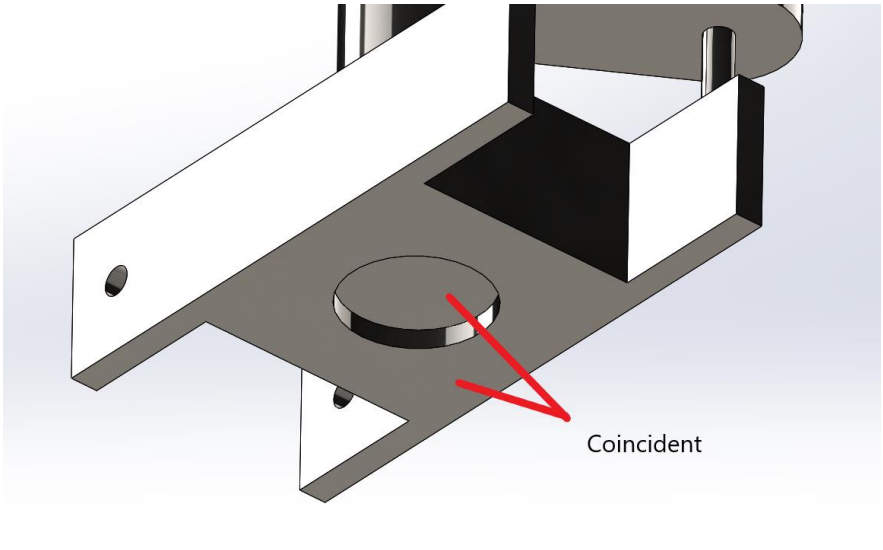

3. Insert the part “rod” into the assembly and create the mates shown below.

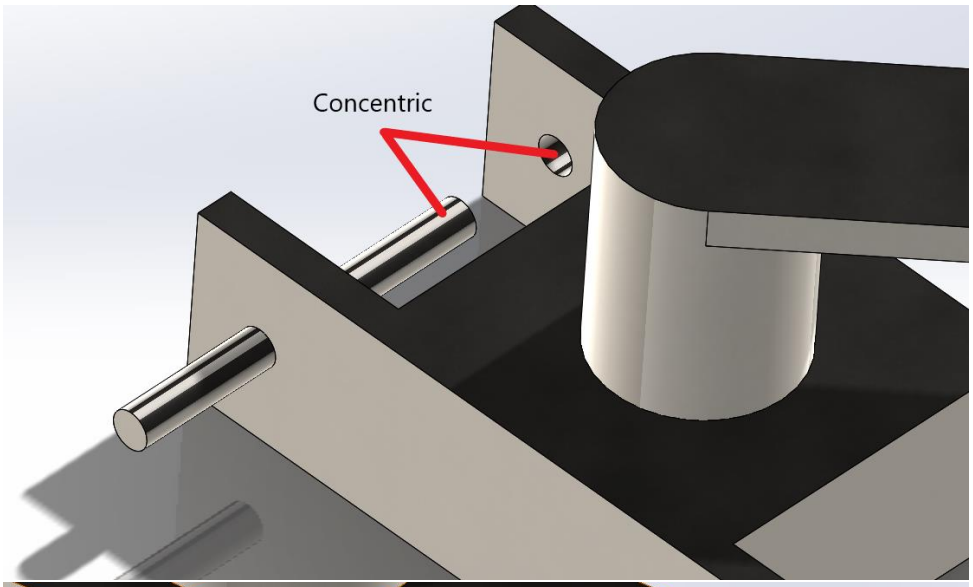

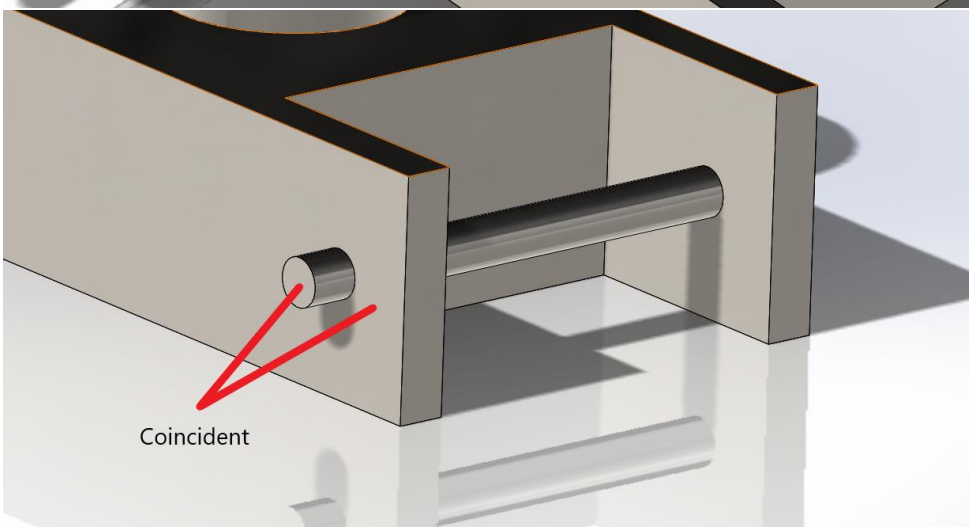

4. Insert “bushing” into the assembly. Apply the mates shown below. What is the center of mass of the assembly with respect to coordinate system 1?

Note: The width mate is found under advanced mates.

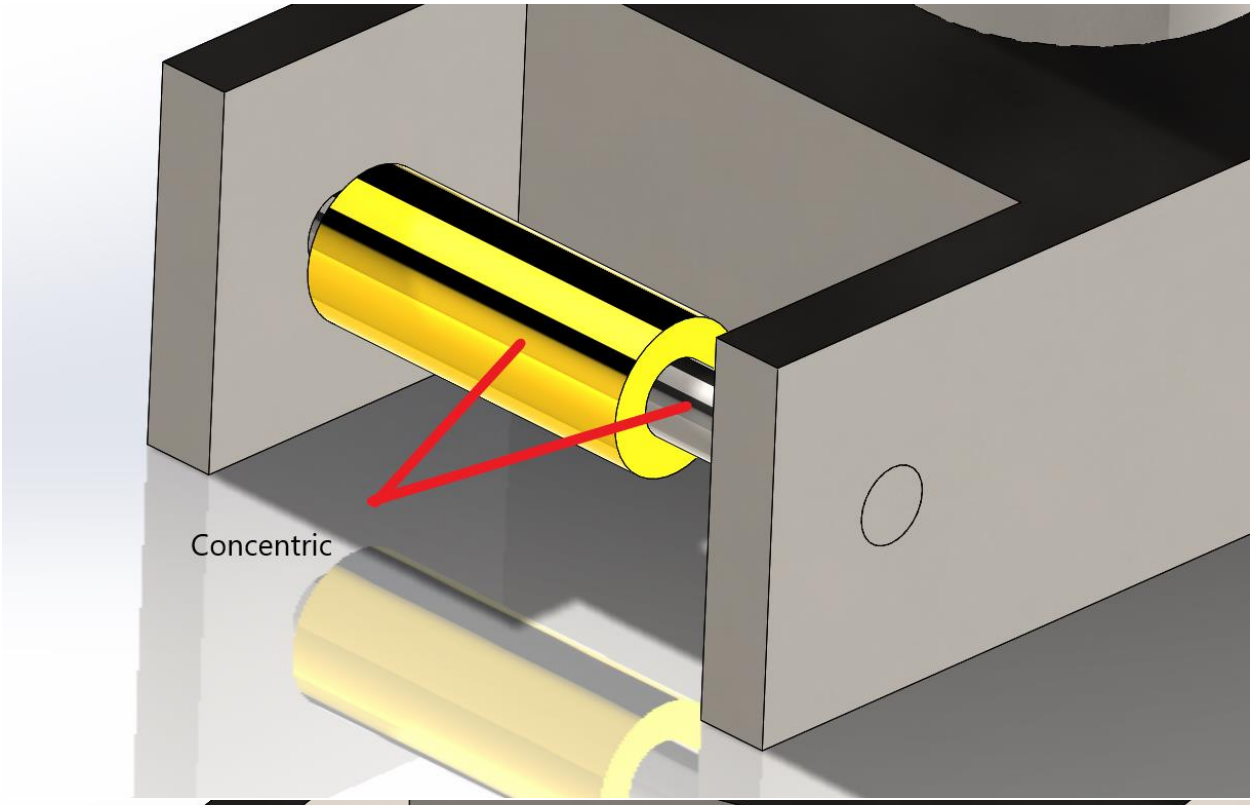

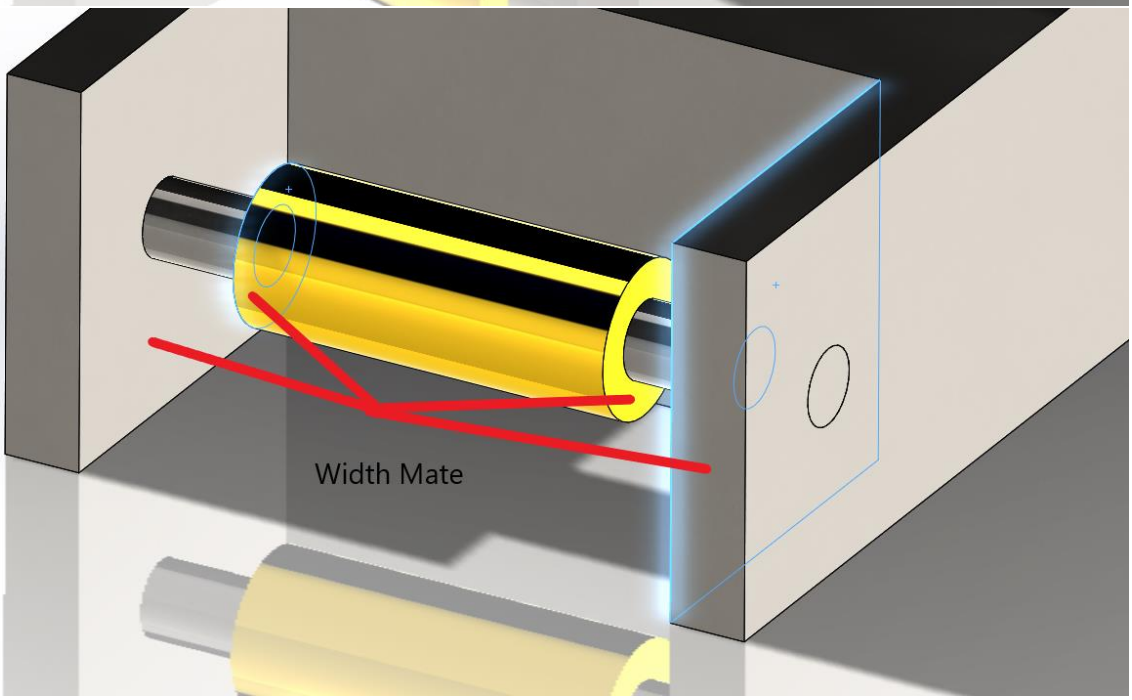

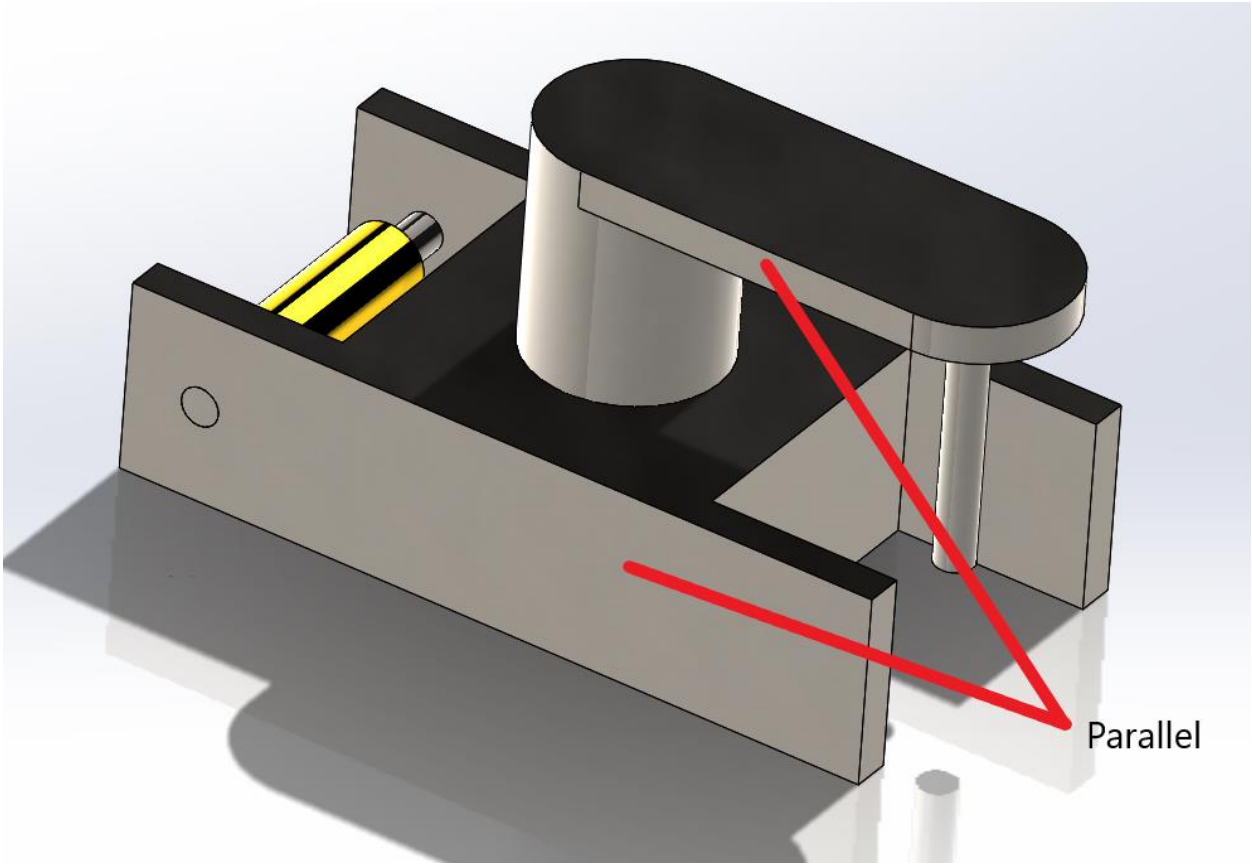
Parallel

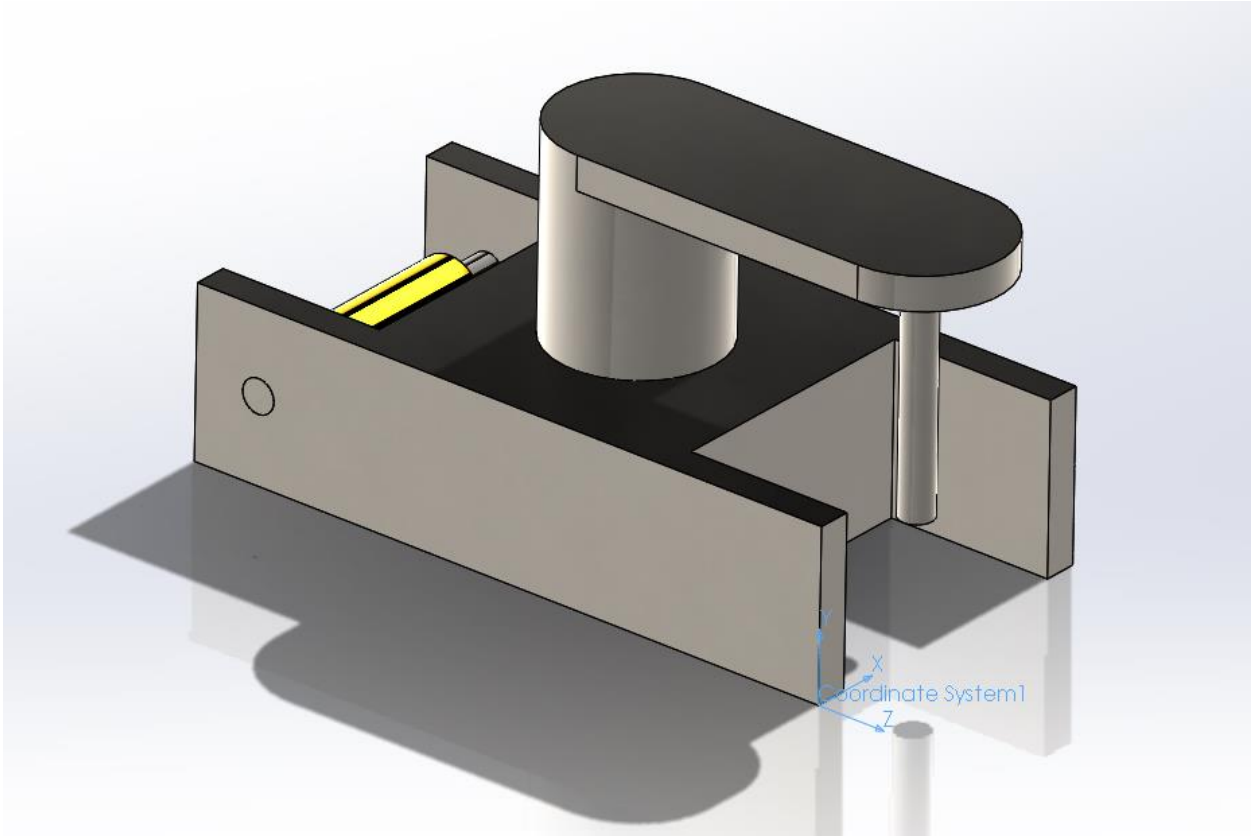
Y
X
Coordinate System1
Z
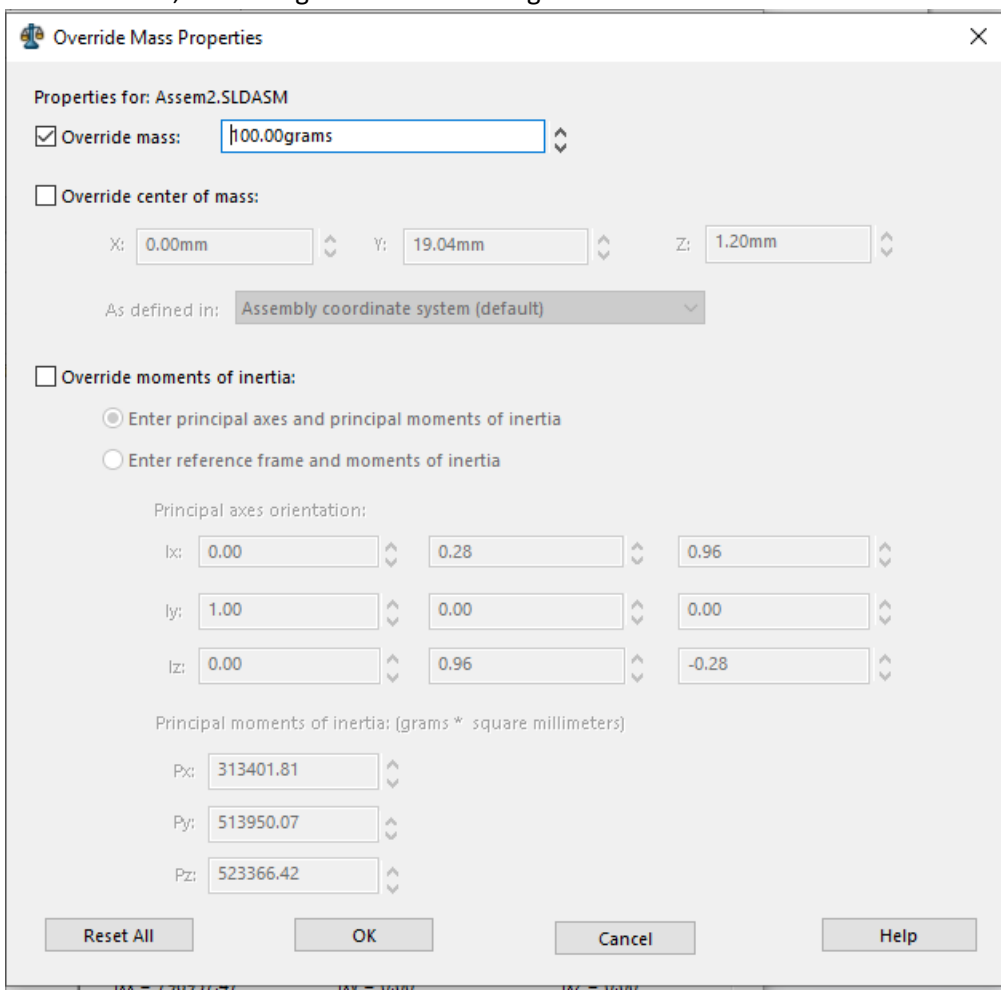
5. In the Evaluate tab under mass properties, click the override mass property button, check override mass, and change the mass to 100 grams. Post a screenshot.