24/24

PART MINI-PROJECT ASSESSMENT (submit this as your cover page)

Name: Nikki Imanaka **Section:** 02 **Date:** 2·28·17

1. How many total hours did you spend on the part mini-project, including class time? How many in planning? How many in modeling? How many in documentation?

Planning 20

Modeling 20

Documenting 5 Total 45

2. Using the ME 301 grading rubric (1-4), analyze your performance in the following:

1- incomplete, major deficiencies 3 - *complete, meets expectations*
2- complete, some deficiencies 4 - *exemplary, exceeds expectations*

Project Component	Self Rating	Rationale
8/8 **Pre-CAD Plan** ✓ - Identify Primary & Secondary Features ✓ - Explain Rationale for Location of Origin ✓ - Pick Effective Front/Top/Side Views ✓ - Order of Feature Implementation ✓ - Locate/Calculate Needed Dimensions ✓ - Keep track of ALL Assumptions	4	I made a complete precad plan with ample explaination and pictures. I also used color to help understanding.
8/8 **Process Documentation** ✓ - Summary Tab Overlaid on Model ✓ - Illustration of Modeling Steps ✓ - Explanation of Modeling Steps ✓ - Annotated (i.e. renamed) Design Tree ✓ - Lessons/Discoveries (about this part as well as about SolidWorks)	4	I did everything listed to the best of my ability and included as many pictures as possible to illustrate the process.
8/8 **Finished Products** ✓ - Fully-Defined Sketches ✓ - Correct/Accurate Model ✓ - Attractive Visualization of Final Part (include at least 1 color image) ✓ - Calculation of Mass & Center of Mass ✓ - Quality Engineering Drawing(s) on Multiple Sheets (w/complete set of dimensions, use of part properties, and filled out ME template w/ other title block items)	4	· Included everything. · 2 color images · all sketches are fully defined · Drawing was done to the best of my ability to have all information needed to create the part.

ME301-02	Tractor Wheel Pre-CAD Plan	Nikki Imanaka

- My primary features will be the revolved section of the wheel. I'll start with this part because then I can circular pattern the other secondary features onto it.

- To create the first revolve feature I used the drawing dimensions shown:

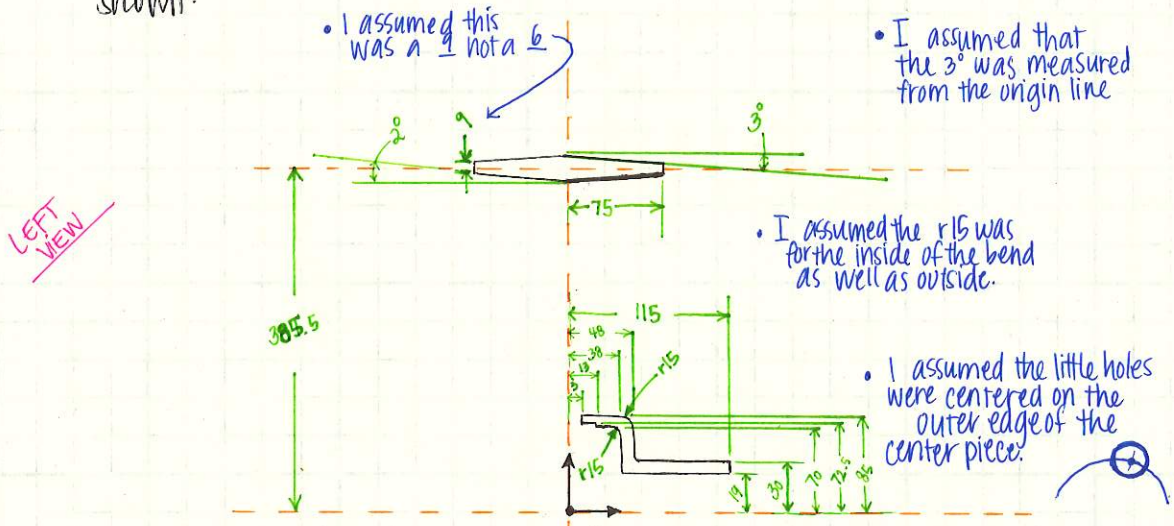

- use reference lines to measure the radius of the outer ring.

origin will be in the center of the wheel to create the most symmetry

• I assumed the 390 radius was measured to the top of the outside edge of the outer ring...

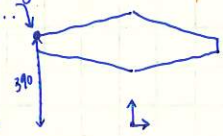

- used center vertical reference to make the wheel's outer ring centered on the origin.

• When I calculate it out the outer diameter is a little smaller than the given so I assume they just rounded a little.

- Next, I did the 3 small holes on the center piece.

  - I started with a horizontal reference line through the axis of origin.
  - I will create a circle with its center coincident with the outer edge of the inner piece with a radius of 6 mm., then I will create a half circle of radius 15 mm around that and make its other half a rectangular shape to make sure it intersects the inner piece.

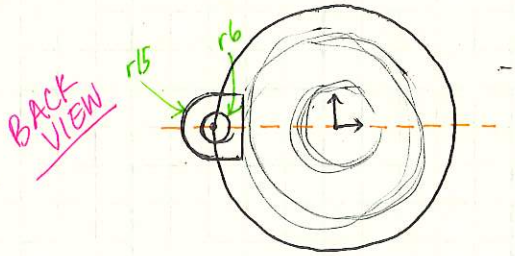

- I will extrude the outer piece up to the surface of the center piece and then cut the inner circle through all to create the hole.

- Then, since the top is filleted, I will create another rectangular sketch and extrude it down to make the hole piece mesh with the center piece.

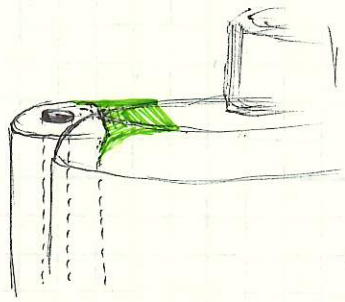

- Then I will circular pattern the extrude, cut, and extra extrude piece. 3 instances equally spaced.

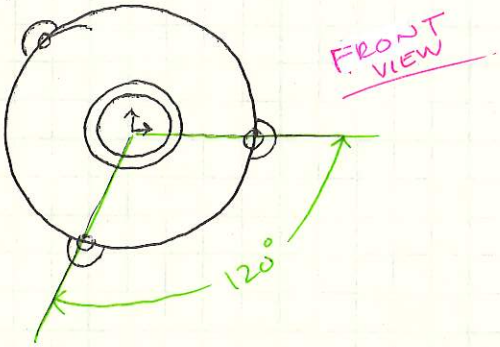

- I will do the spokes next.
  - I will create 4 planes to create the sketches of the different sections of the spokes then use the loft tool to create it.

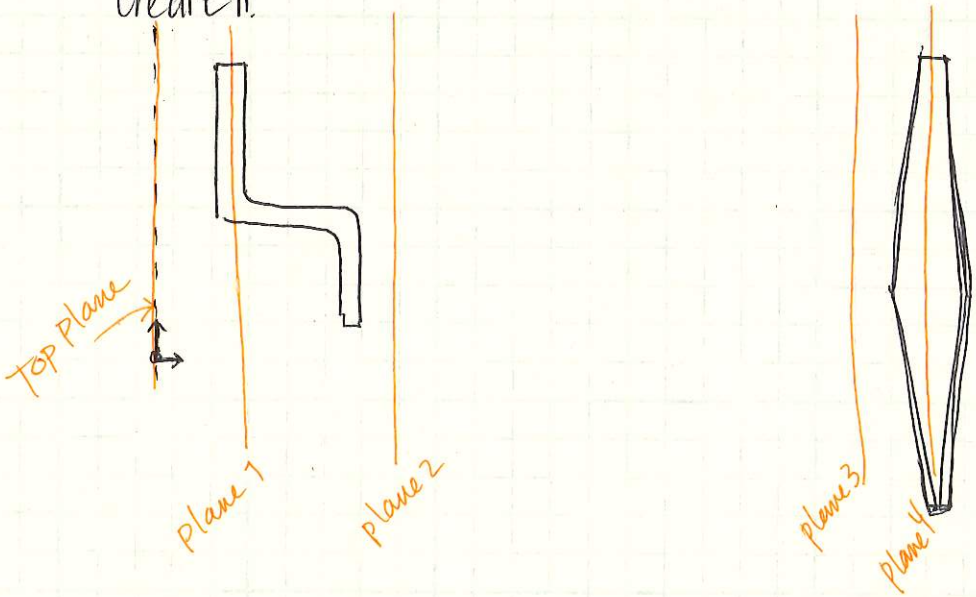

3-0235 — 50 SHEETS — 5 SQUARES
3-0236 — 100 SHEETS — 5 SQUARES
3-0237 — 200 SHEETS — 5 SQUARES
3-0137 — 200 SHEETS — FILLER
COMET

3-0235 — 50 SHEETS — 5 SQUARES
3-0236 — 100 SHEETS — 5 SQUARES
3-0237 — 200 SHEETS — 5 SQUARES
3-0137 — 200 SHEETS — FILLER
COMET

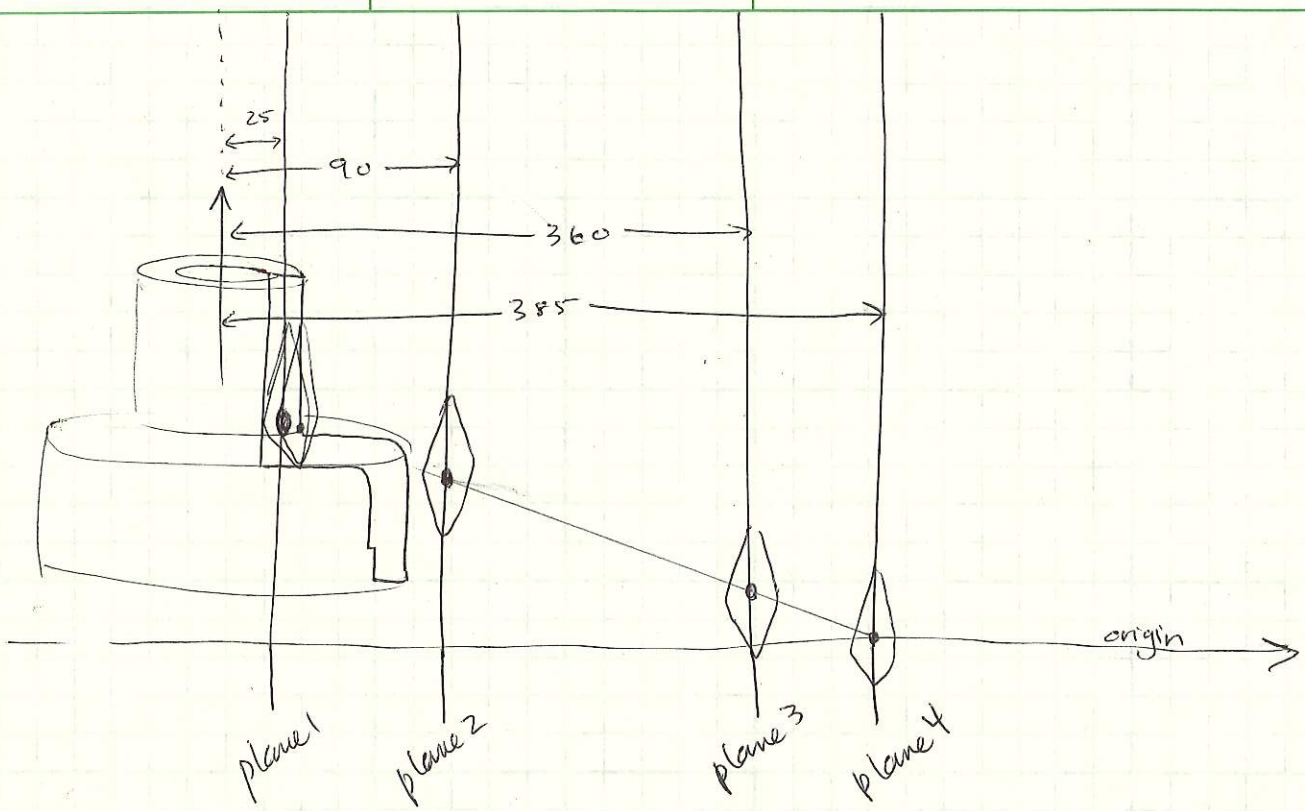

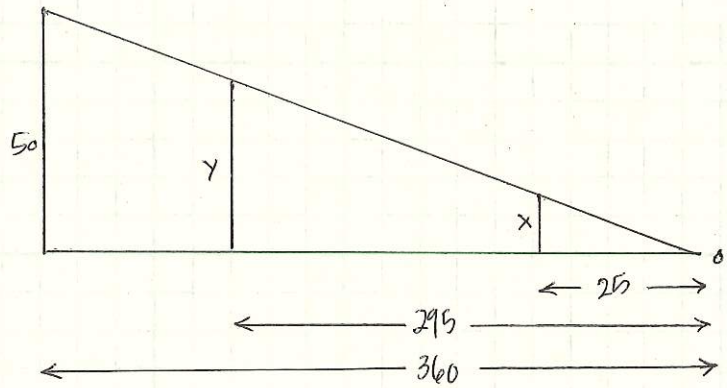

$$\frac{50}{365} = \frac{x}{25} = \frac{y}{295}$$

$x = 3.425$
$y = 40.41$

- I want the sections of the spoke to be more or less linear so I will space them like this.

- There were not any dimensions for the height of the spoke where it connects to the center piece so I just guestimated.

3-0235 — 50 SHEETS — 5 SQUARES
3-0236 — 100 SHEETS — 5 SQUARES
3-0237 — 200 SHEETS — 5 SQUARES
3-0137 — 200 SHEETS — FILLER
COMET

UPSIDEDOWN TOP VIEW

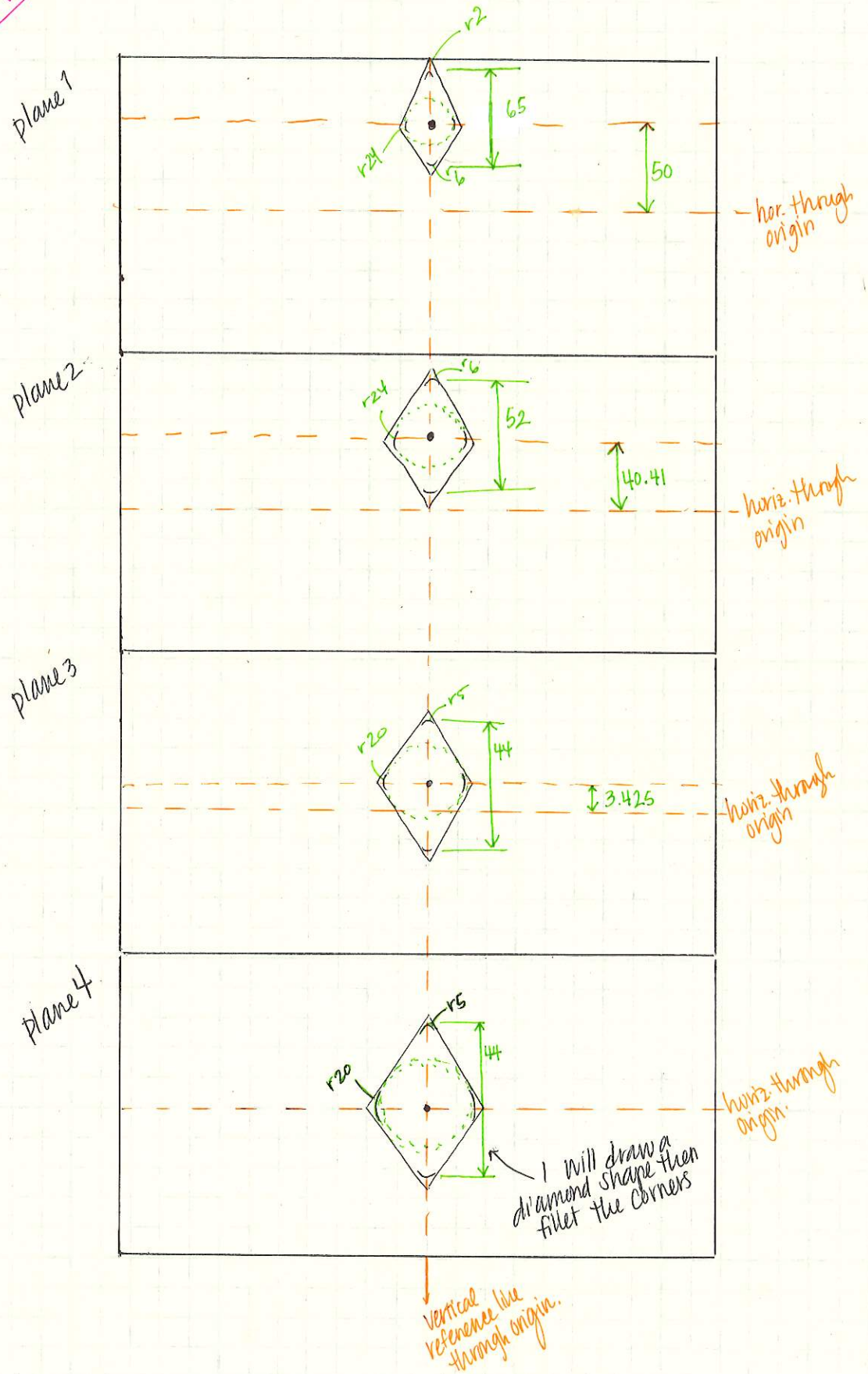

- I will loft the 4 sketches and then use the circular pattern tool to create 6 instances equally spaced.

- I will then do the tracks on the wheel.

  - The first one is @ the top center of the front face.
  - I will create a sketch on the front face plane and a separate one on the front face of the wheel.
  - I will then loft these together.
  - Then I will create another sketch of a rectangle on the face of the track sides and revolve cut about the bottom line to make a 4° angle on the track.

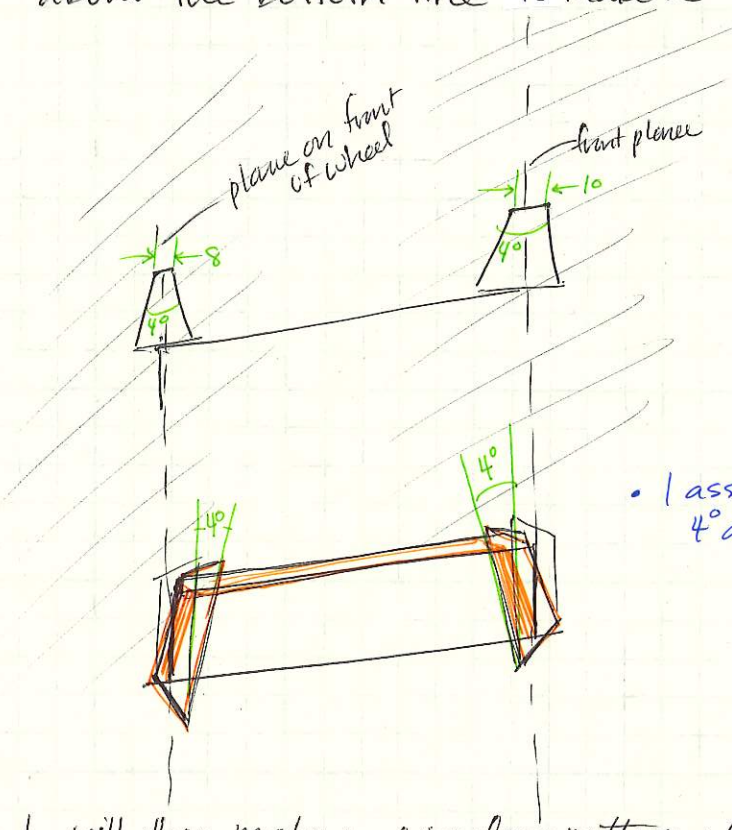

- I assumed that there was a 4° angle on both faces of the track.

- I will then make a circular pattern of 14 equally spaced tracks on the front half of the wheel.
- I will then repeat the process to create tracks on the other side of the wheel.
- I will start this one on the horizontal axis on the right of the front face so these are between the front half tracks.

- I assumed that the tracks are symmetric so the inner side was the 10 mm side and the sides on the furthest front and back faces are the 8 mm sides.

3-0235 — 50 SHEETS — 5 SQUARES
3-0236 — 100 SHEETS — 5 SQUARES
3-0237 — 200 SHEETS — 5 SQUARES
3-0137 — 200 SHEETS — FILLER
COMET

COMET
3-0235 — 50 SHEETS — 5 SQUARES
3-0236 — 100 SHEETS — 5 SQUARES
3-0237 — 200 SHEETS — 5 SQUARES
3-0137 — 200 SHEETS — FILLER

- I will then start the middle tracks.

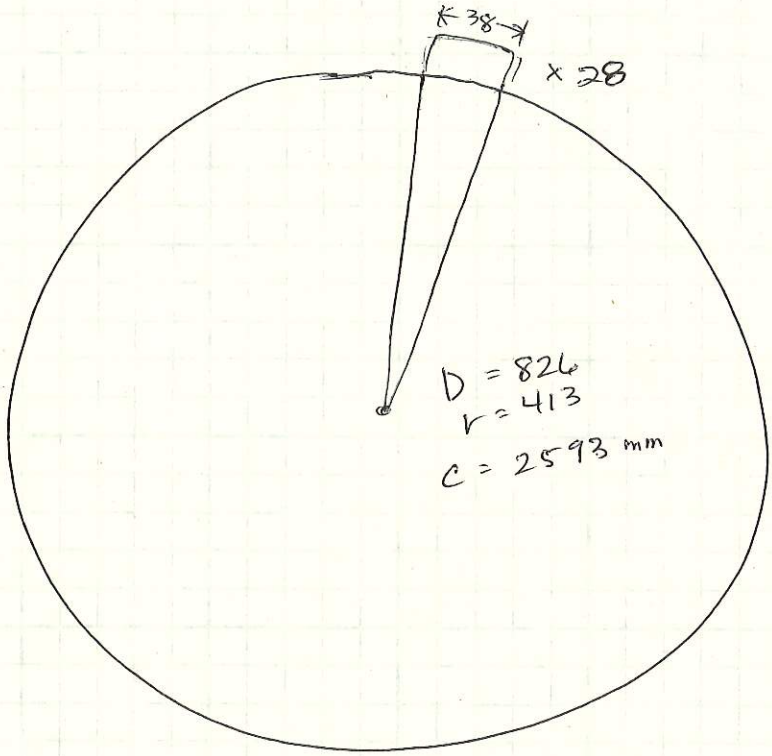

$$\frac{360}{28} = 12.857$$

$$\frac{38}{2593} = 0.01465484$$

$$\frac{12.857^\circ}{2} = 6.428$$

$$\times 360^\circ = 5.276^\circ$$

$$\frac{5.276^\circ}{2} = 2.638$$

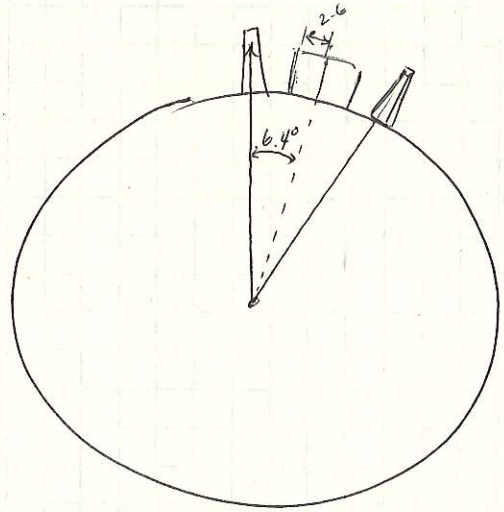

$$6.428 - 2.638 = 3.79^\circ$$

The mid tracks will start at 3.79° and then rotate about the origin 5.276°.

- I will create a rotated right plane to 3.79° to draw the face of the middle track.

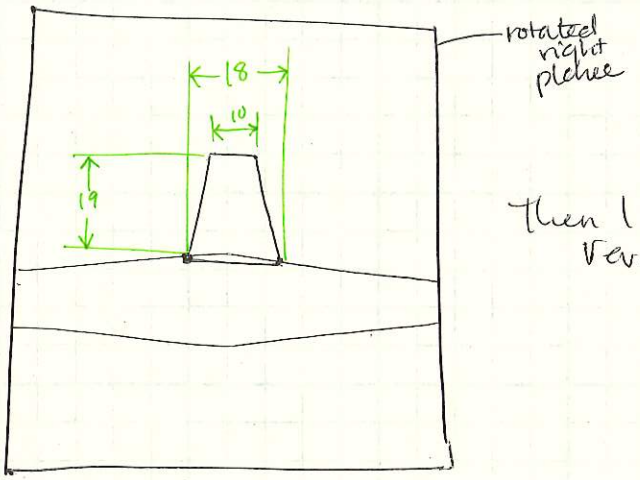

Then I will rotate extrude revolve 5.276°.

- I will then create a circular pattern of this piece with 28 instances equally spaced.

- Then I will create the ribs.
  - I will create a reference plane from the front plane 4mm in front of it. Then I will be able to extrude it 8 mm and have it still be centered in the wheel.

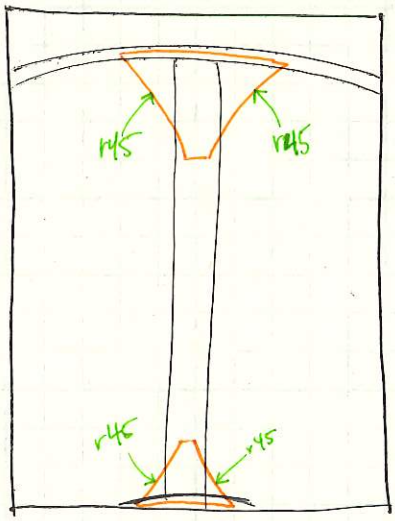

- I will create the sketches shown on the left.
- I will then extrude into the page 8 mm.
- I will then pattern the extruded ribs 6 times equally spaced around the origin.

• I assumed the radius of the inner ribs were also 45 mm.

- I will then create the other ribs that stick out of the front plane.

- I will switch to the right view and create a plane 4 mm off of the right plane.

- I will probable create a section view so I can sketch on this plane without being blocked by the tracks and other parts.

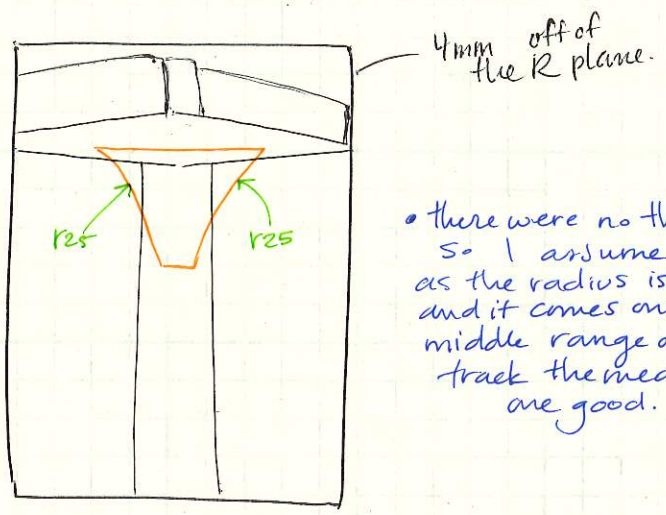

• there were no ther dimensions so I assume that as long as the radius is 25 mm and it comes out to the middle range of the horizontal track the measurements are good.

- I will then extrude into the page 8 mm and then circular pattern 6 times equally spaced around the wheel.

• I assumed that the thickness of all the ribs are 8 mm.

- Lastly I will go to the back view and create a circular sketch on the back face of the inner piece @ 140 ϕ. I will then extrude this cut inward to get rid of the lofted spokes that may have shown through the inside of the center piece.

- I will cut extrude this to the inner surface and then fillet the corner, r5.

- I will then change the material to cast iron.

TRACTOR

Wheel

DESIGN JOURNAL

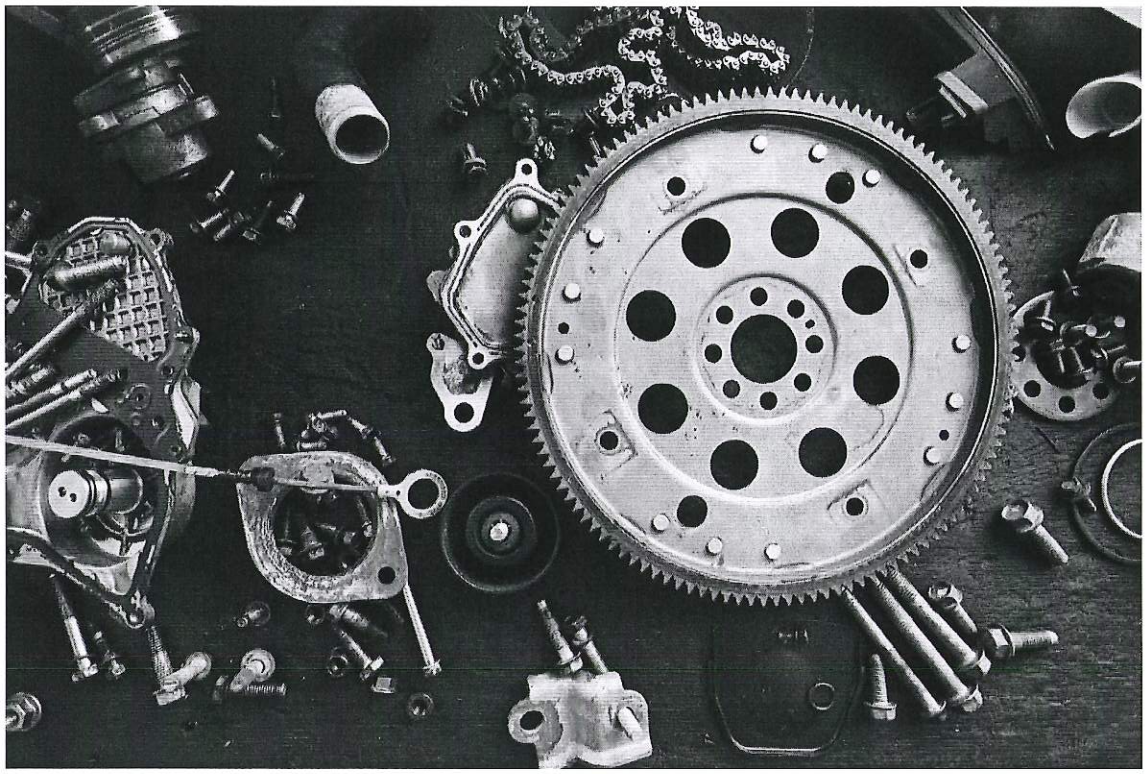

ME 301-02

Mini Part Assignment

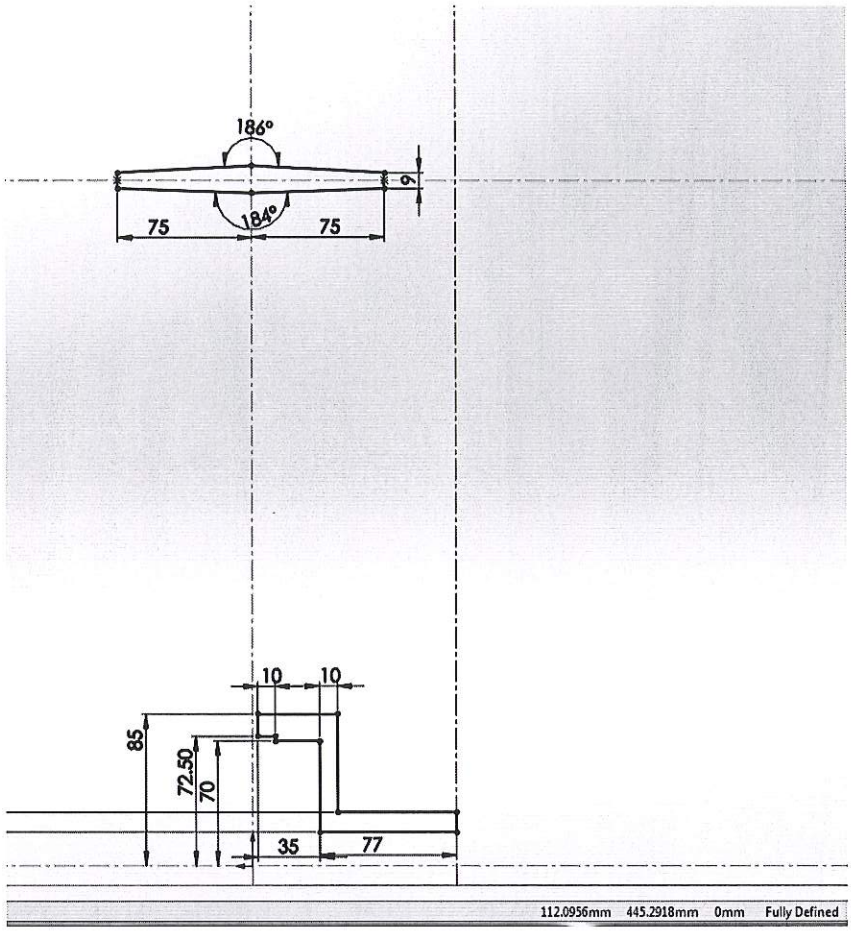

I created the circular part of the wheel first.

I created a couple guidelines to make the outer ring the correct distance from the center and to make the origin in the center of the wheel so that there is as much symmetry as possible.

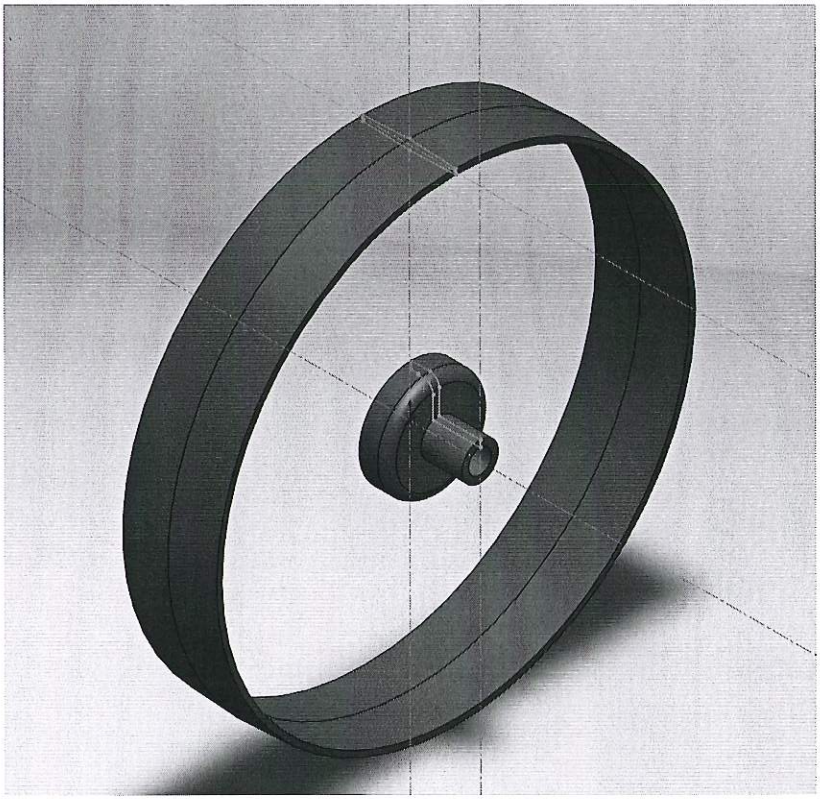

I used the revolve extrude tool to revolve the sketch and make the product shown on the left.

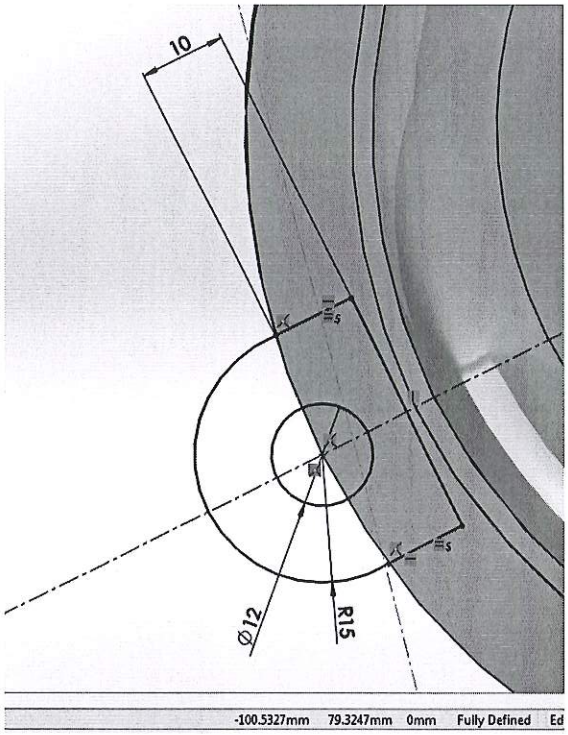

The next thing I did was create the three holes around the center piece. I did this by sketching on the back of the wheel. I made a 12mm diameter hole with its center on the edge of the center piece's wider edge.

I created a 15mm radius half circle connected to a rectangular shape to go around the hole and then extruded the shape between the sketches up to the surface of the wider section of the center piece. I then cut extruded the smaller hole through all.

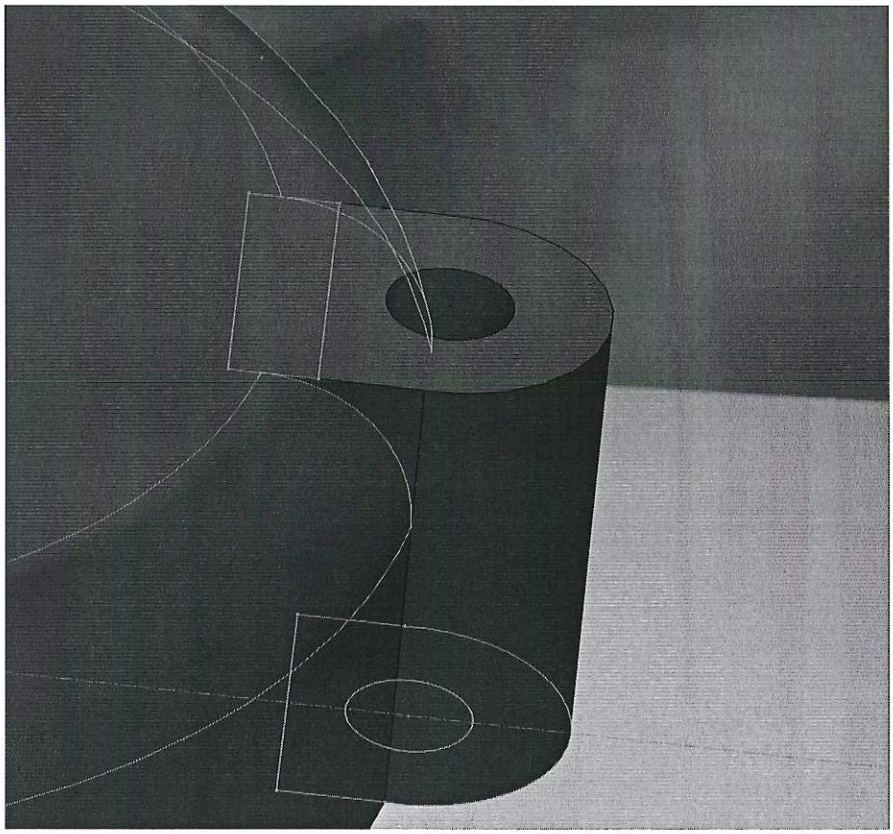

I then created a rectangle sketch on the surface of the wide section to connect the extruded hole section to the center piece completely.

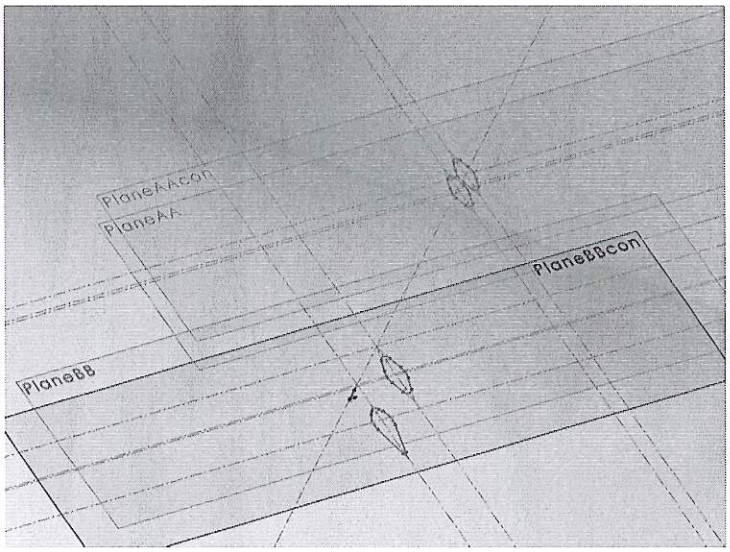

Next, I begun created to create the spokes inside of the wheel. I did this by first creating 4 offset planes from the top plane. I used these planes to create sketches of 4 sections of the spoke.

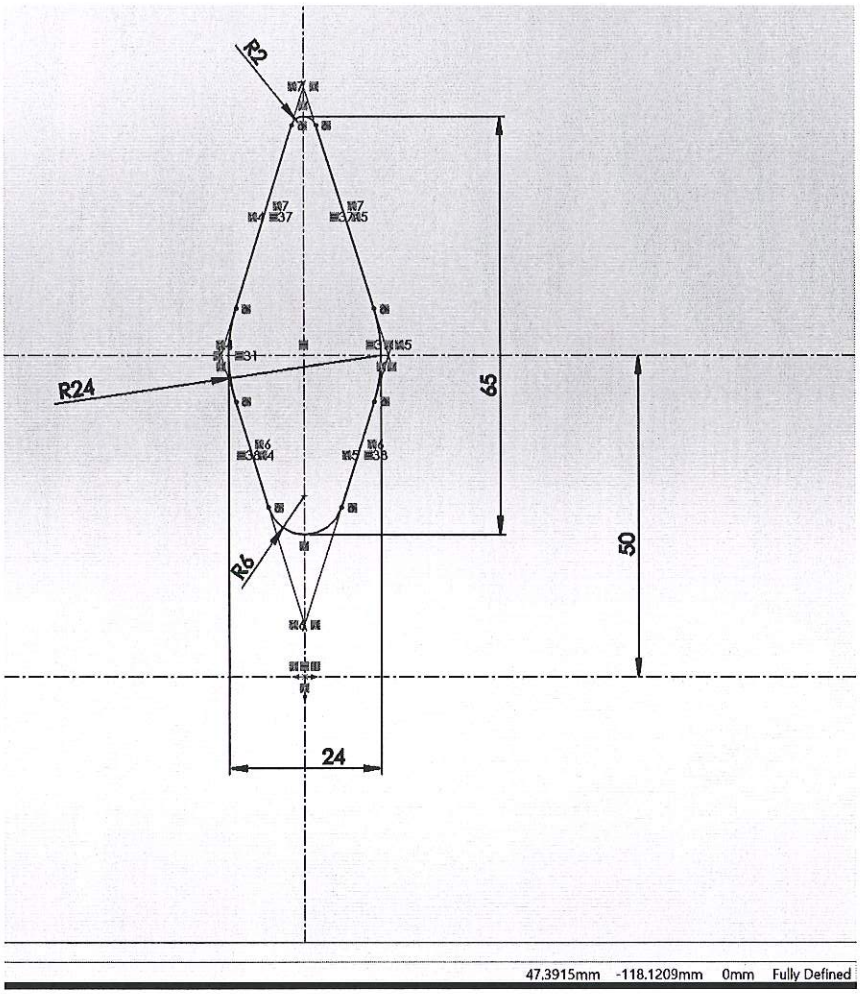

One plane intersecting the inner most wall of the wheel, one just outside of the center piece, one just inside of the outer ring, and one intersecting the outer ring.

This is the sketch on the plane intersecting the innermost walls of the center piece.

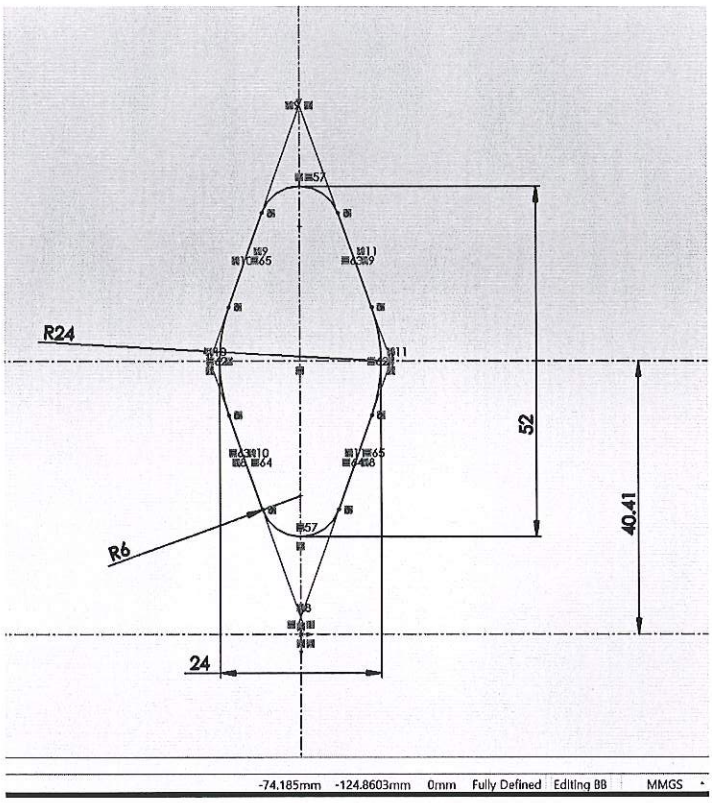

This is the spoke sketch right outside of the center piece.

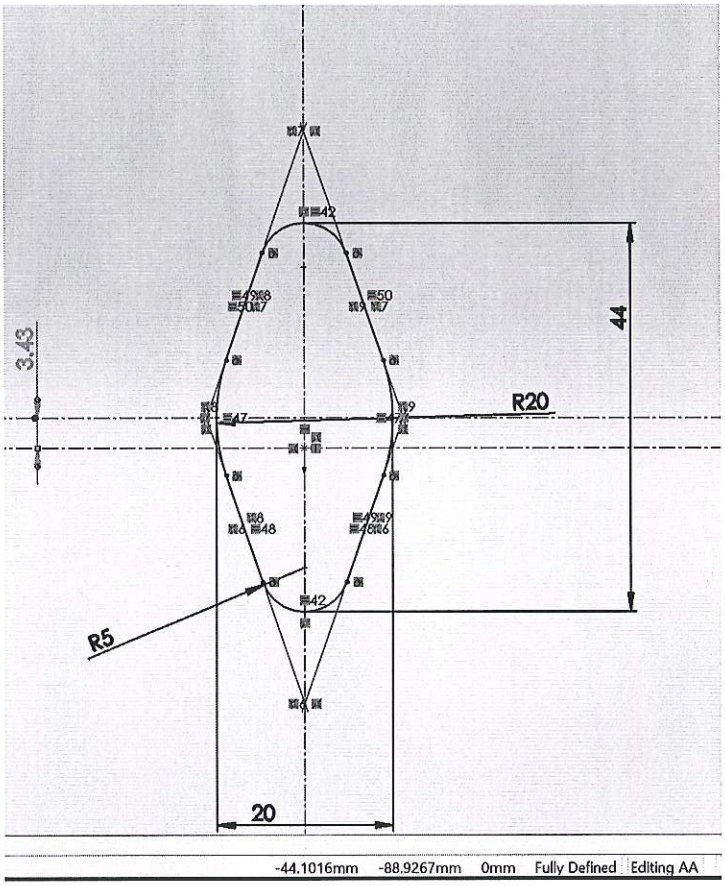

This is the sketch right on the inside of the outer ring of the wheel.

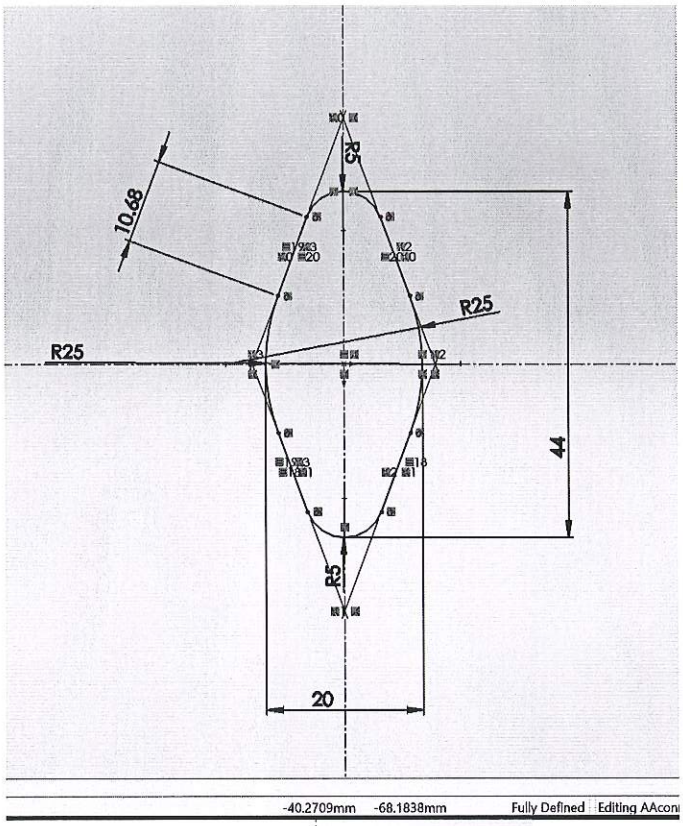

This is the spoke sketch that intersects the outer ring of the wheel.

This one lies on the center of the origin line.

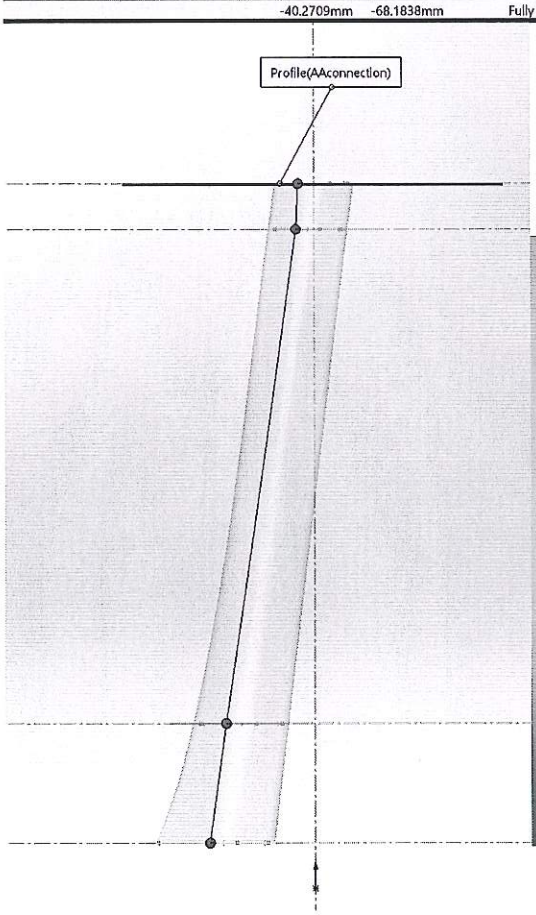

Then I lofted the 4 sketches to create the spoke, then circular patterned it to create 6 instances in the wheel.

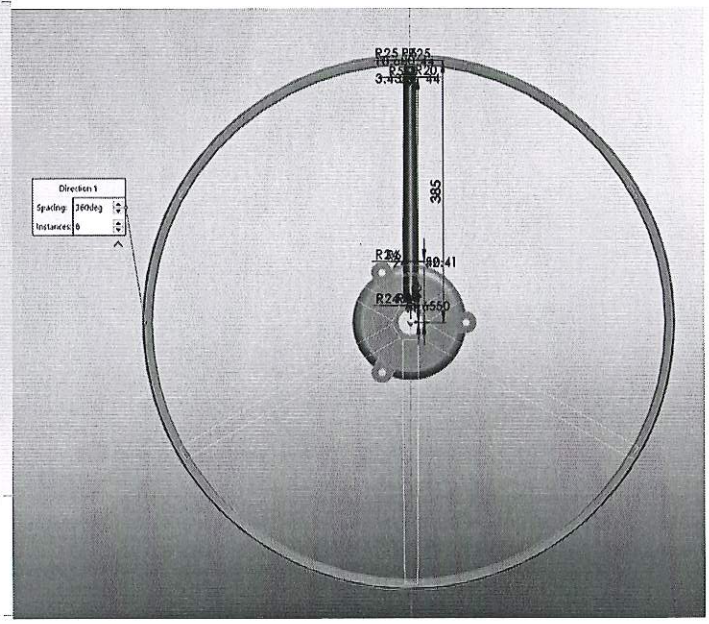

This is the product after patterning the spokes.

Next I started with the tracks on the front side of the wheel. I made two sketches. One on the very front face of the wheel and one in the middle of the wheel.

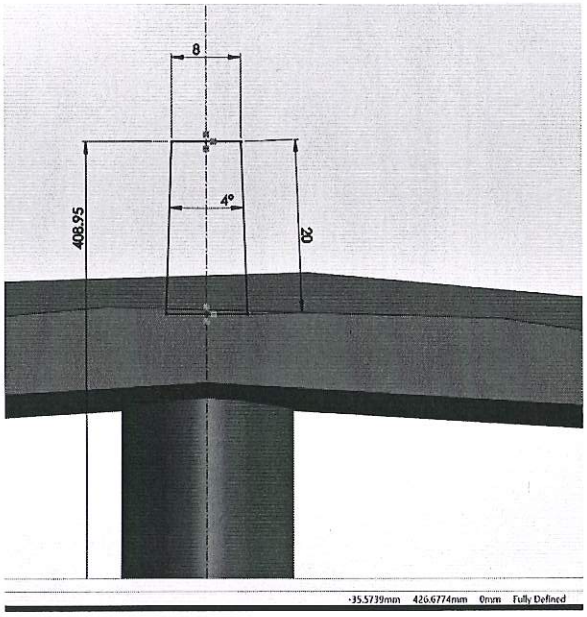

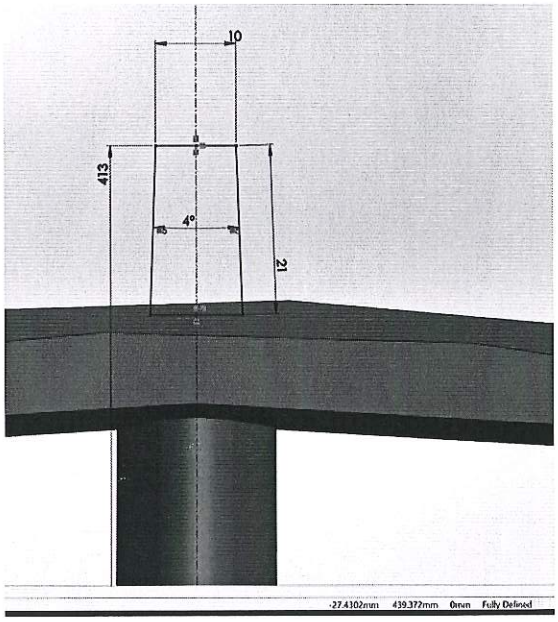

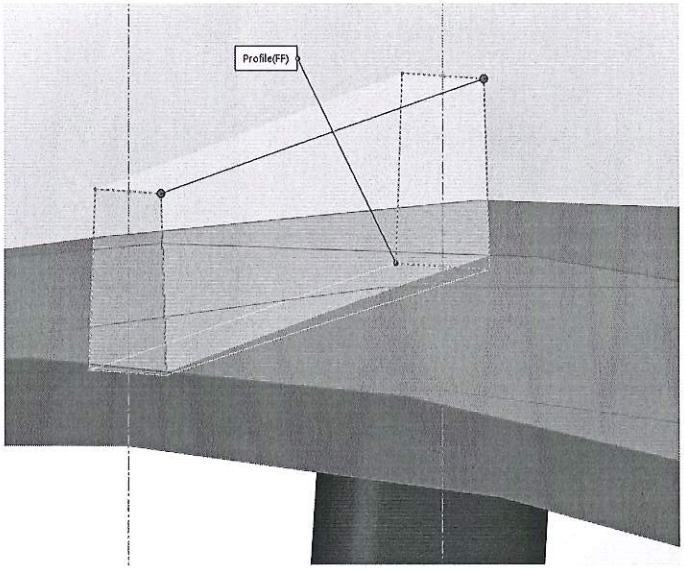

Then I lofted the two sketches together as shown on the left.

After lofting I created a 4 degree slope on each side of the track by sketching a rectangle on each side and revolve cutting it around the bottom edge of the rectangles.

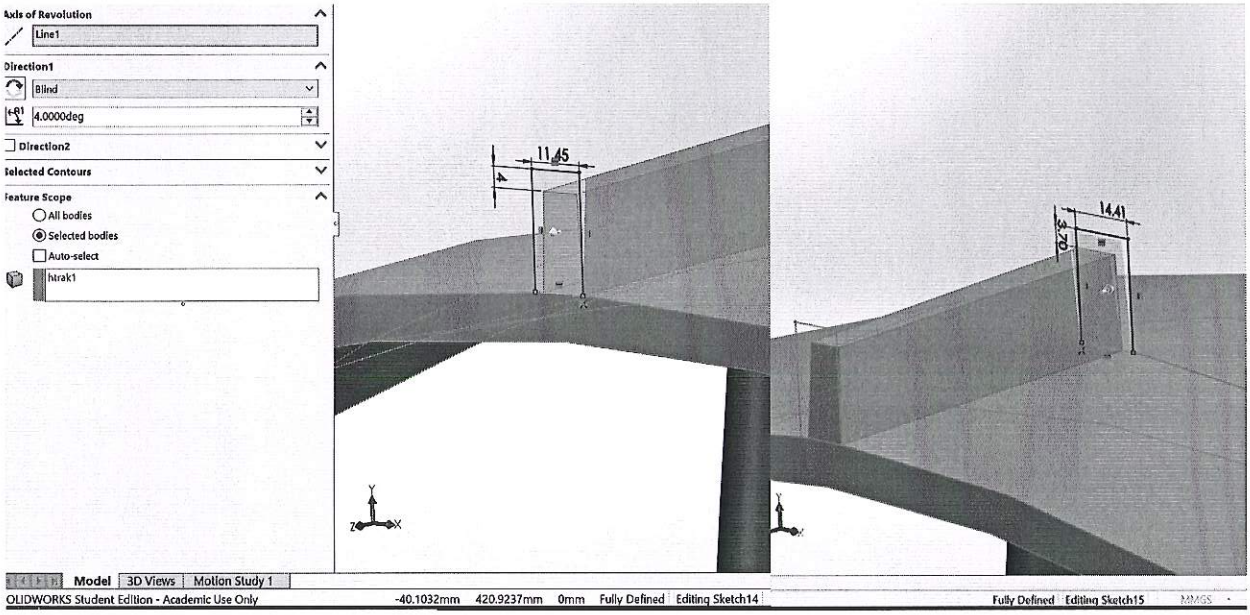

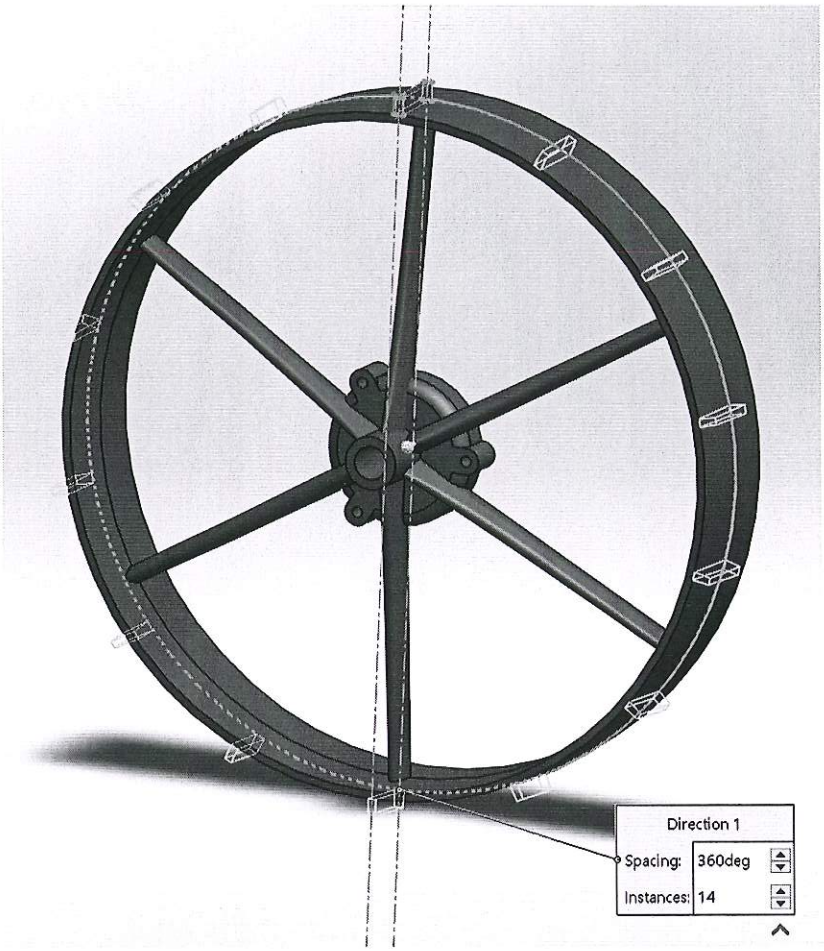

Then I circular patterned the track 14 times around the front of the wheel.

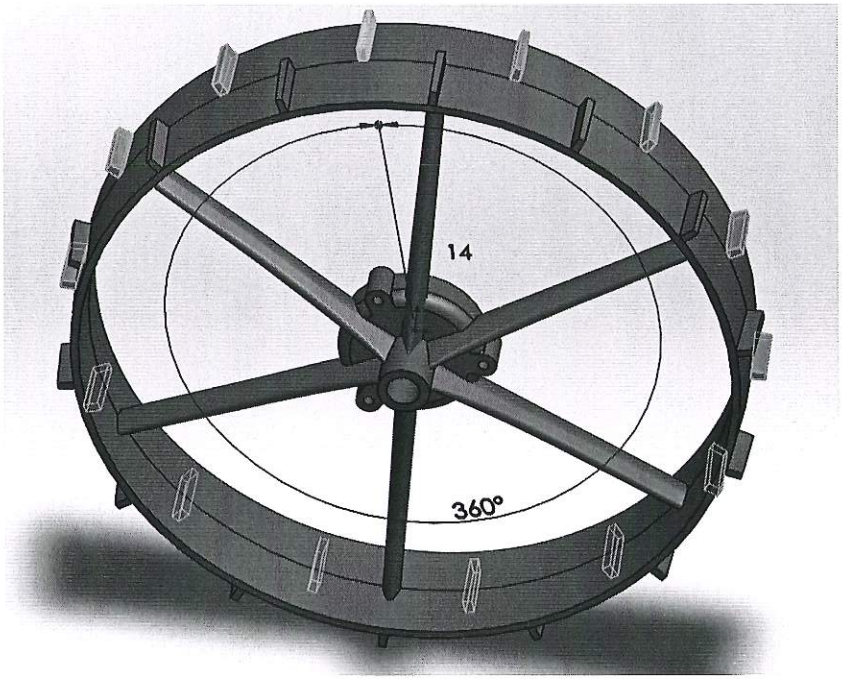

I then repeated the process of creating the track on the back half of the wheel.

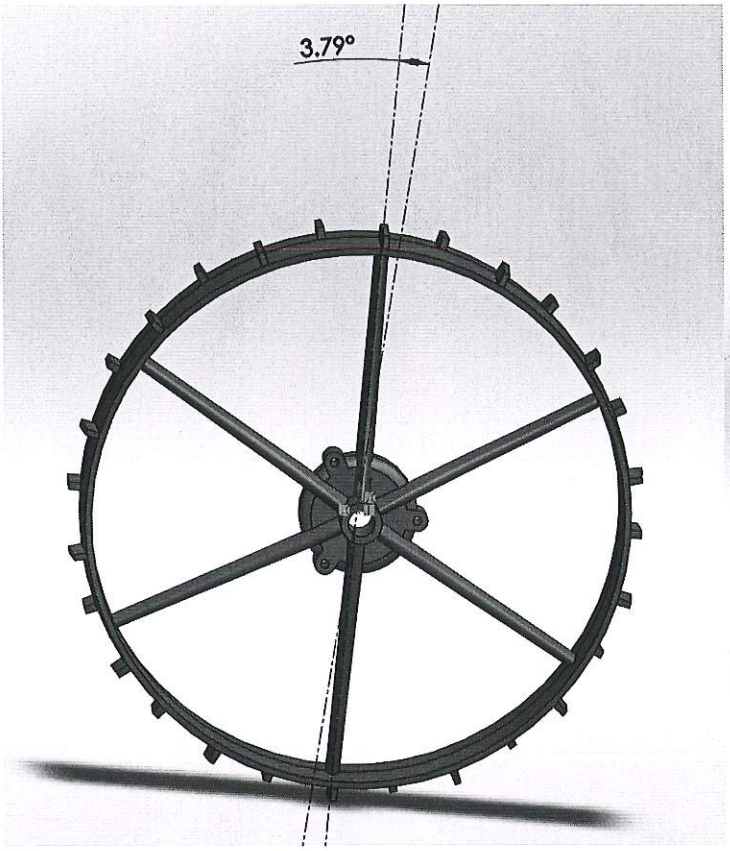

Next I created a rotated right plane to start the middle track sketch.

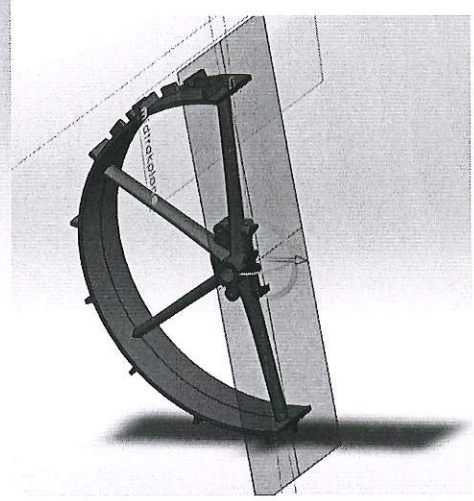

First I made a section view so that I could see past the front and back side tracks.

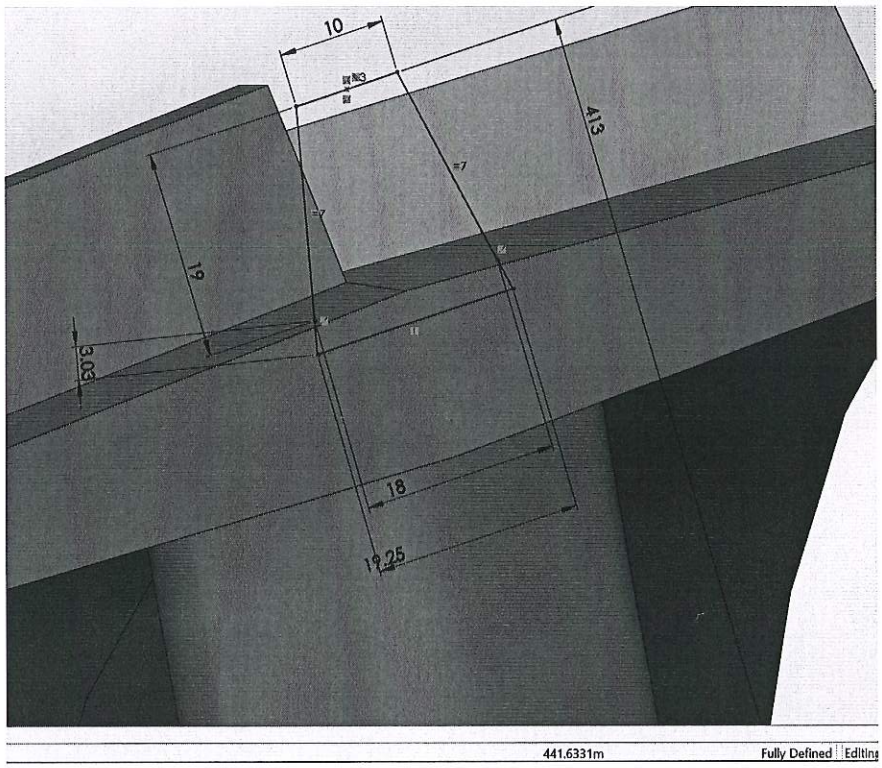

This is the sketch of the middle track face.

I then revolved this sketch 5.26 degrees to make the track 38 mm long. Then I patterned this piece 28 times.

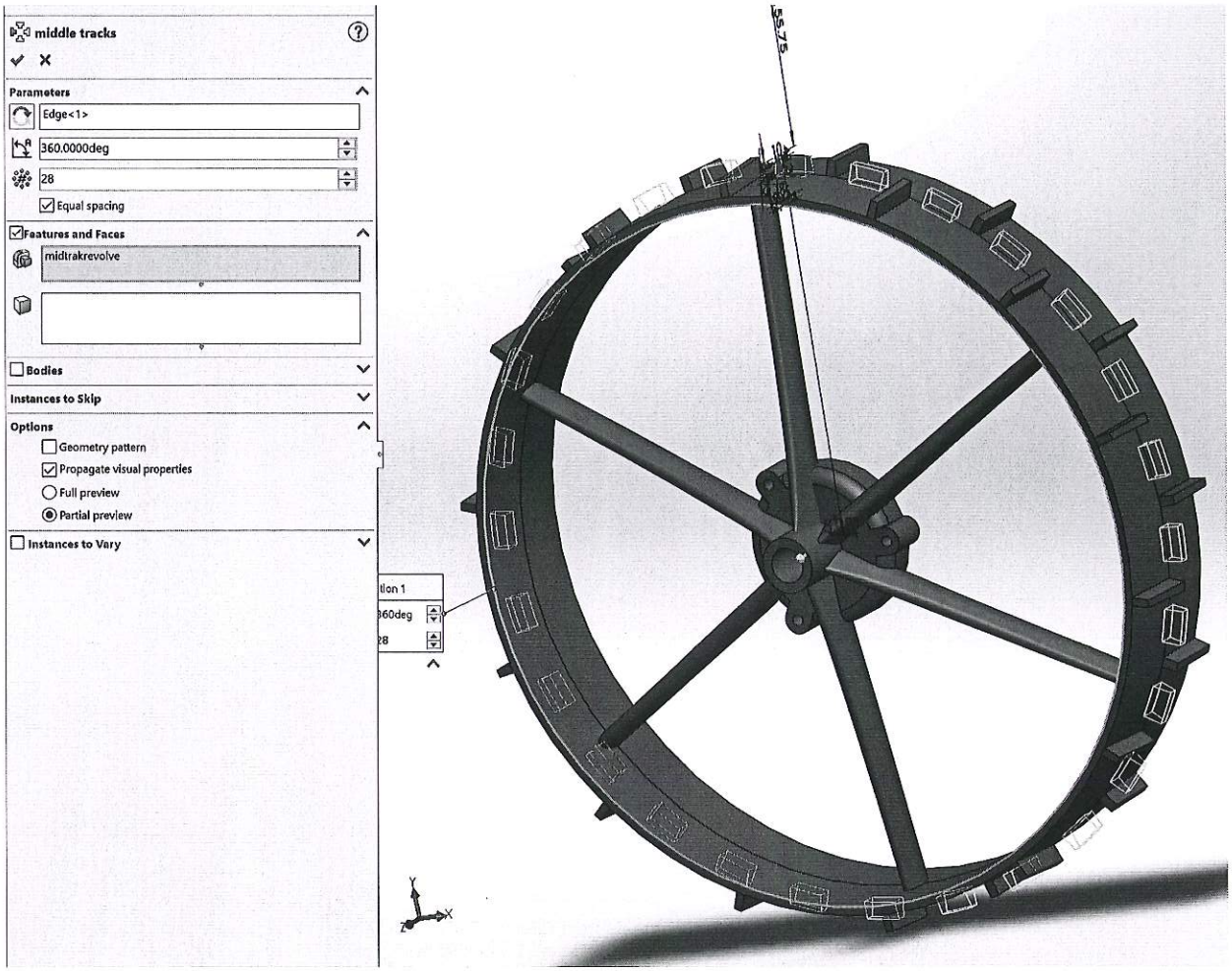

Next, I created a 4mm offset plane from the front plane and sketched 45mm radius ribs shown on the right.

I then extruded this sketch 8mm into the page.

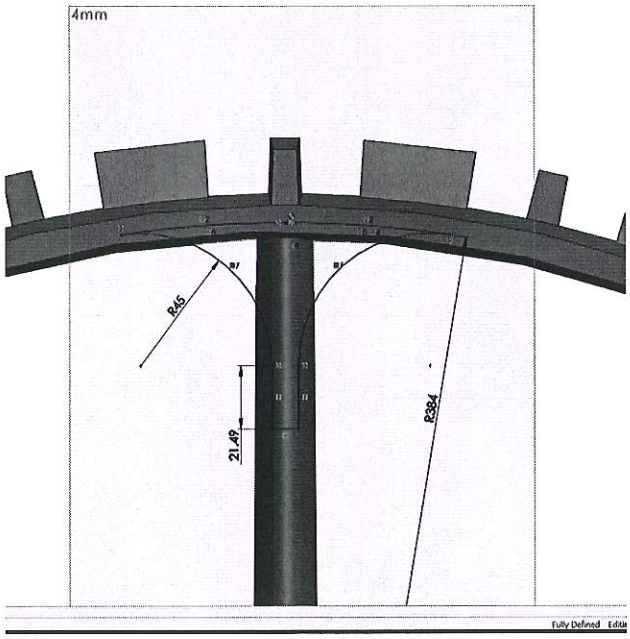

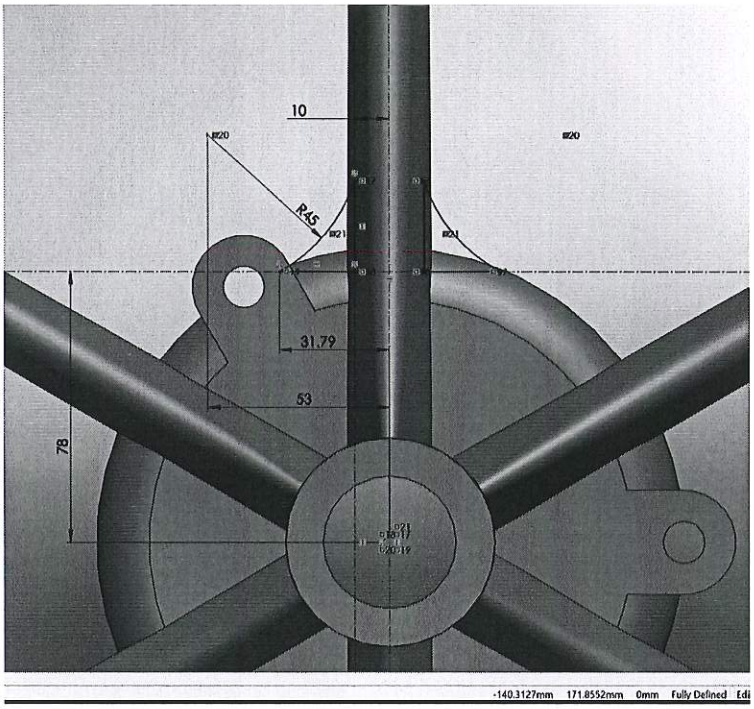

I also created a sketch of inner ribs and extruded these 8mm as well.

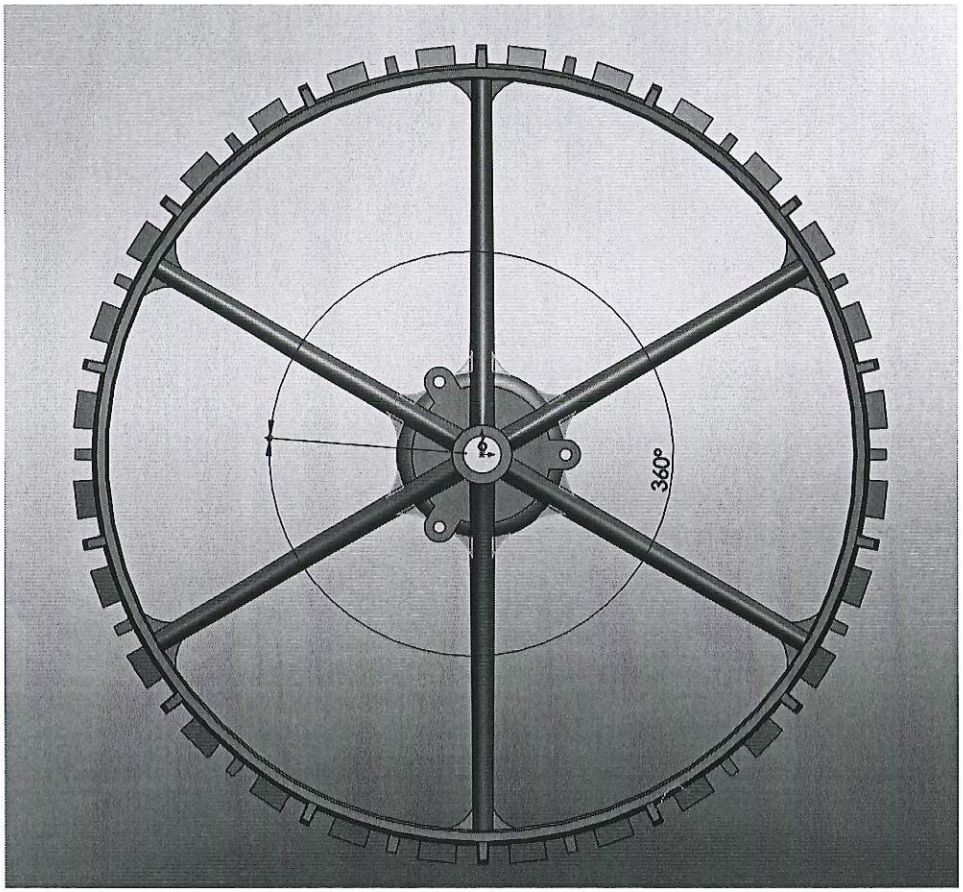

Then I patterned these 4 ribs around the wheel 6 times.

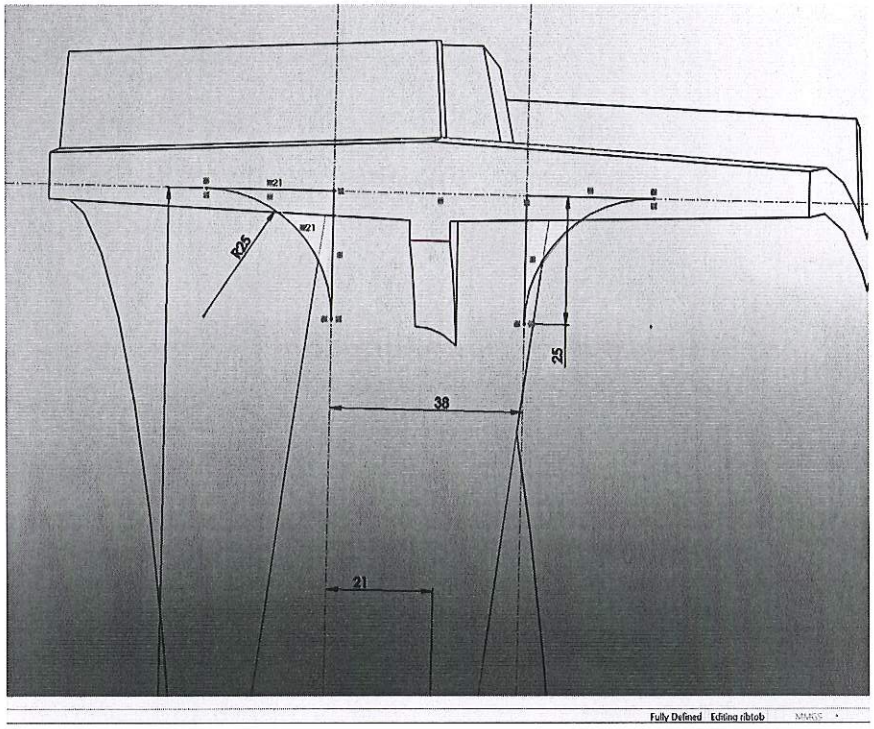

Then I created the last set of ribs by creating a 4mm offset plane from the right plane.

This is the sketch for the last set of ribs.

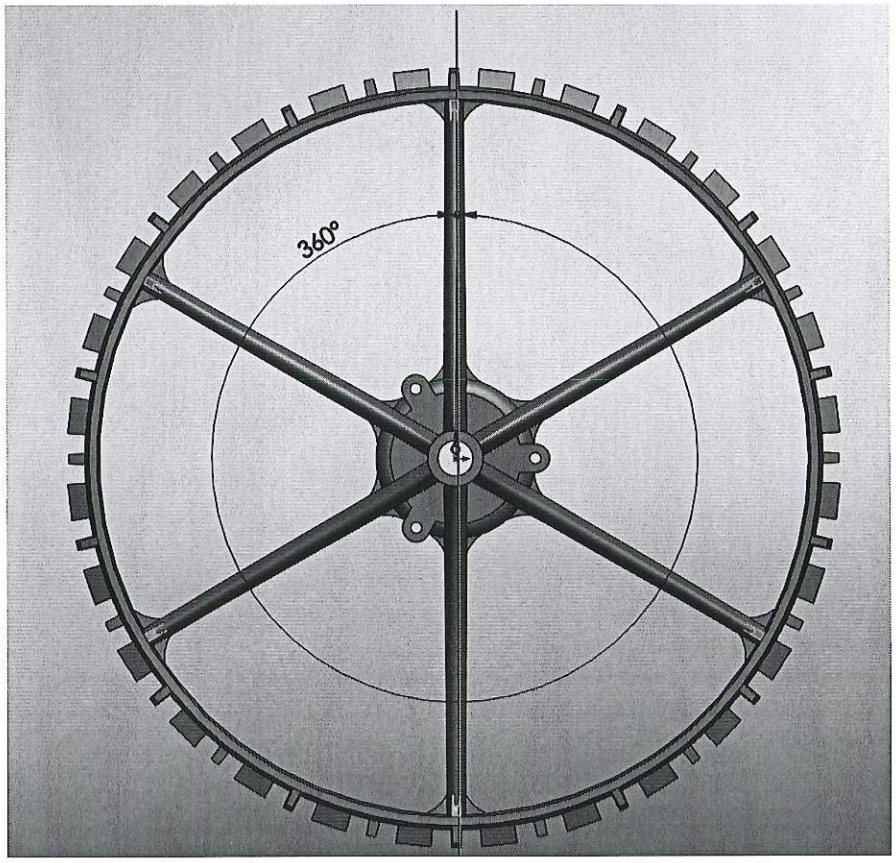

I extruded these 8mm in and then patterned it 6 times around the wheel.

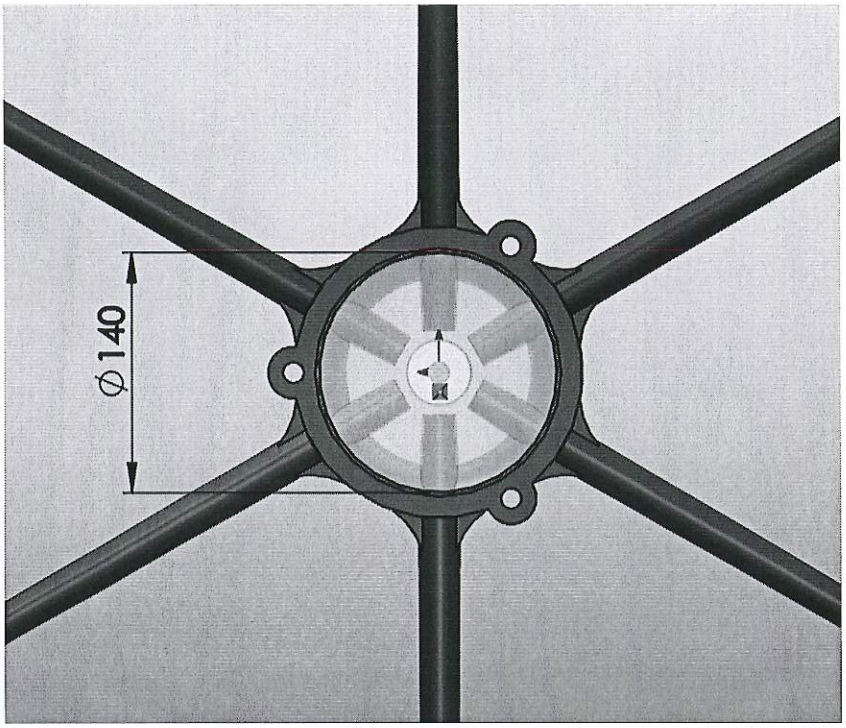

The last step is to clear out the inside of the center piece because of the spokes that were lofted through. I did this by creating a sketch of a circle on the back side of the wheel.

Then I extrude cut into the piece up to the inner surface .

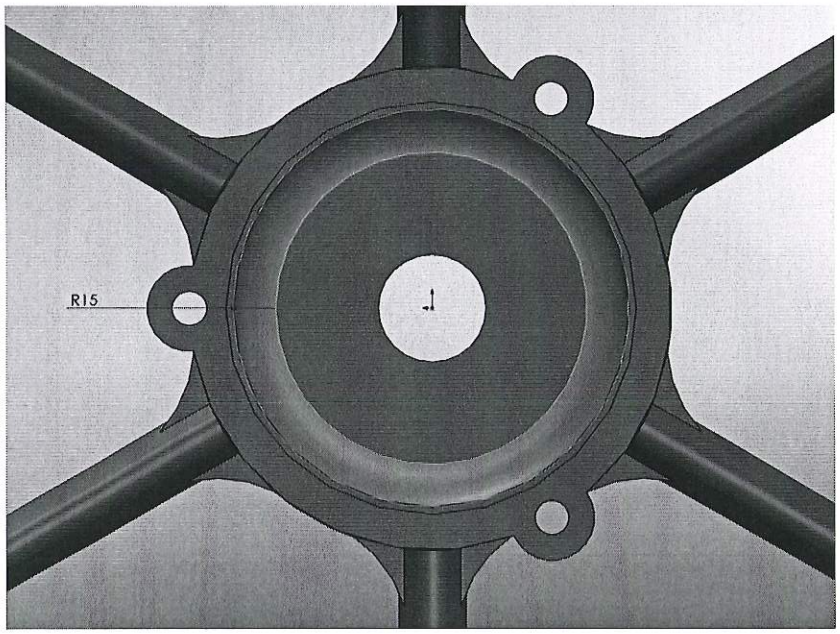

Then I filleted the inside corner the cut made to finish the part.

This is the finished wheel product:

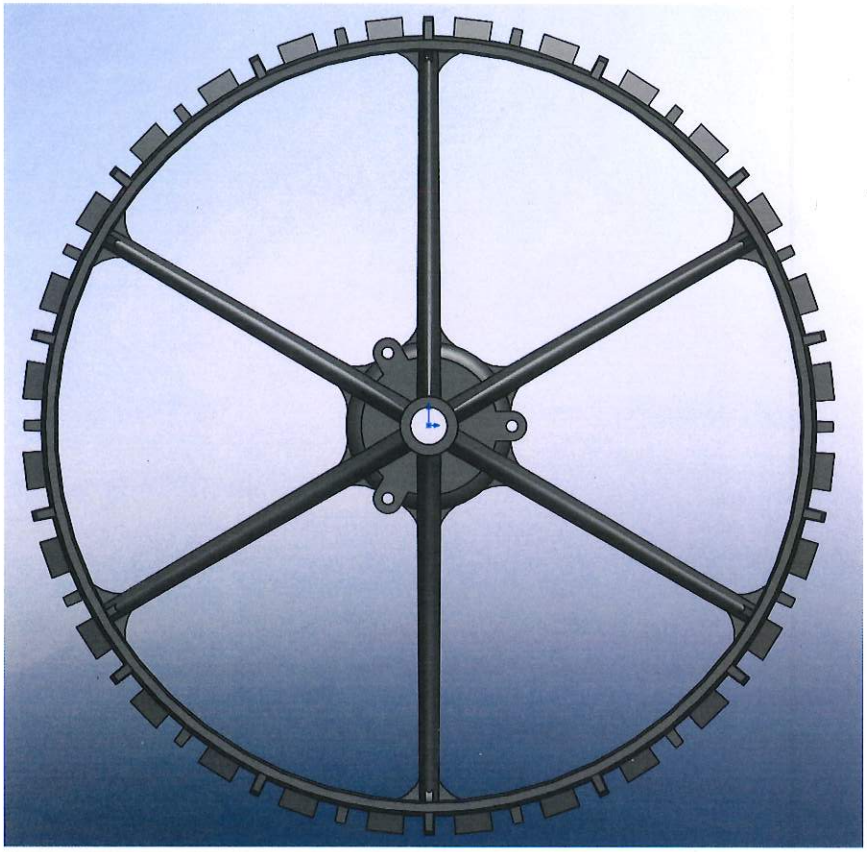

Front View

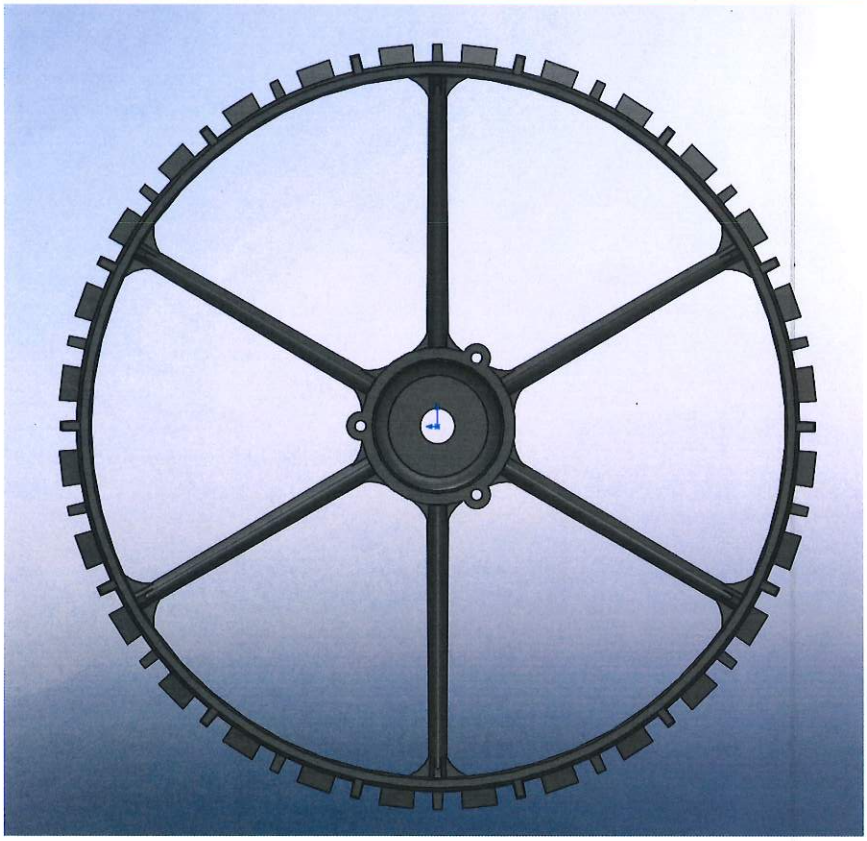

Back View

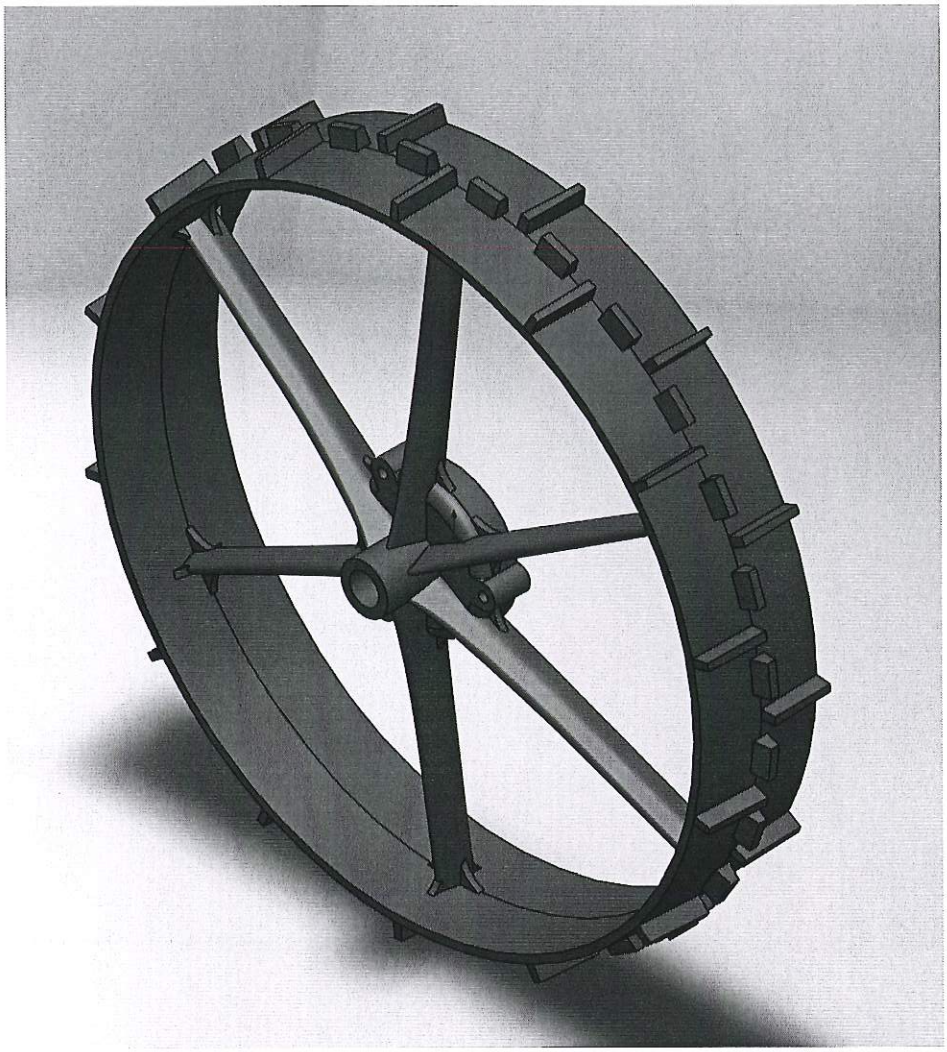

Isometric View

This is the fully expanded design tree.

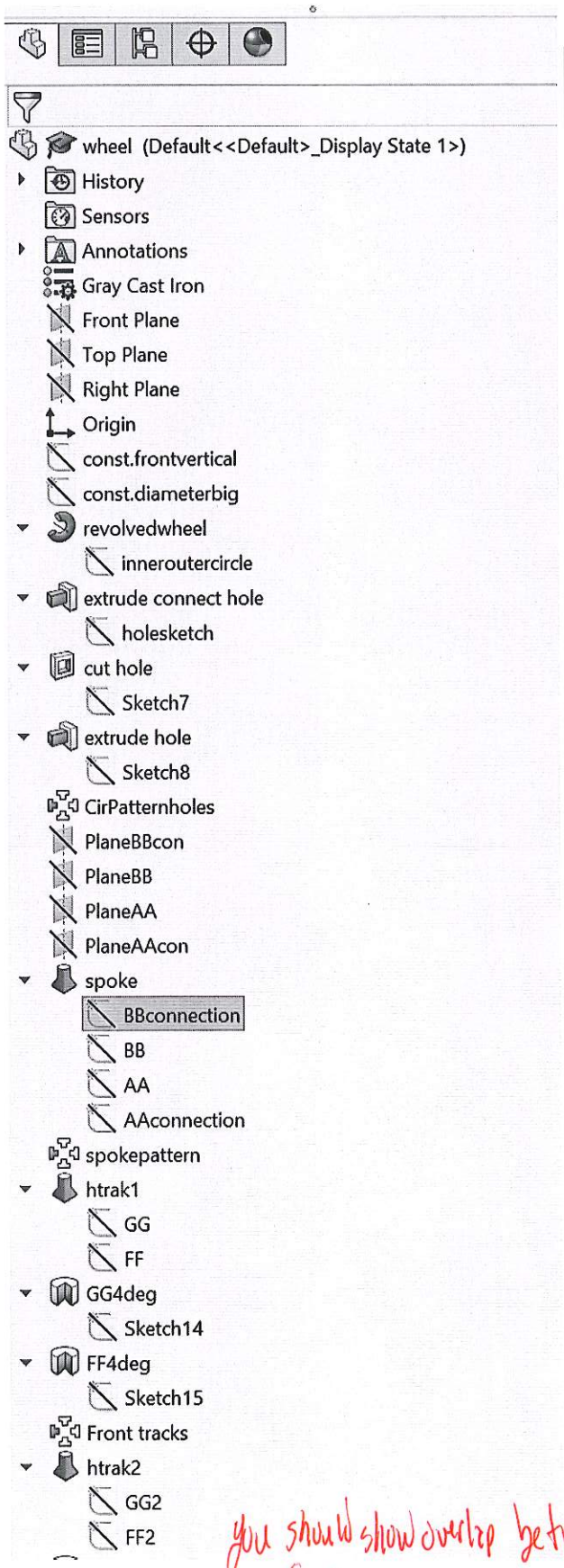

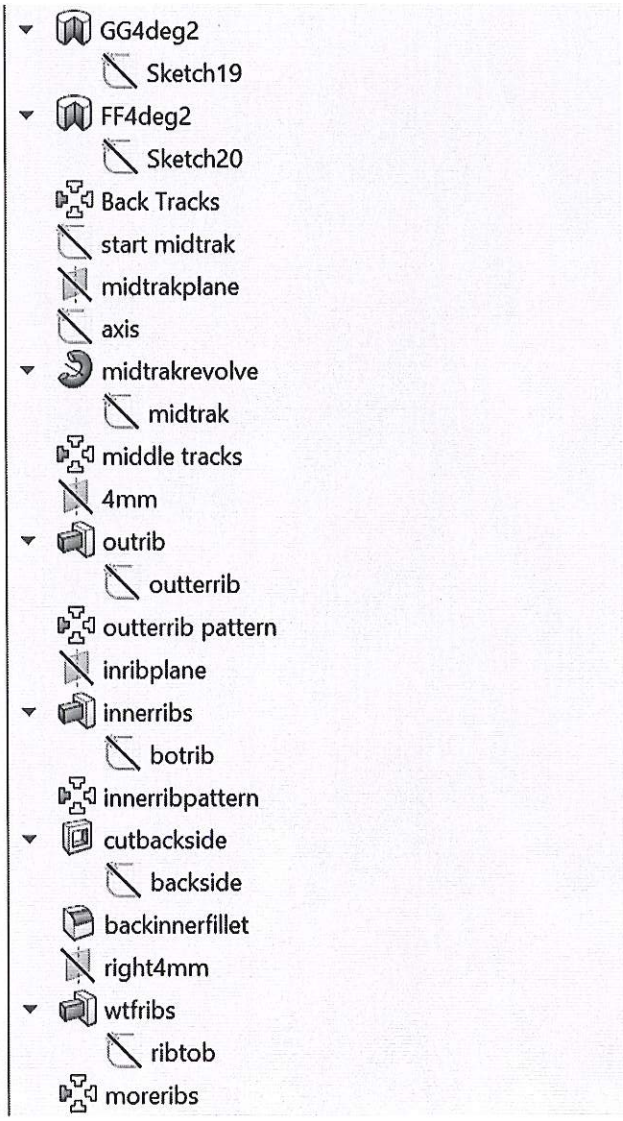

you should show overlap between screenshots for verification of all features shown.

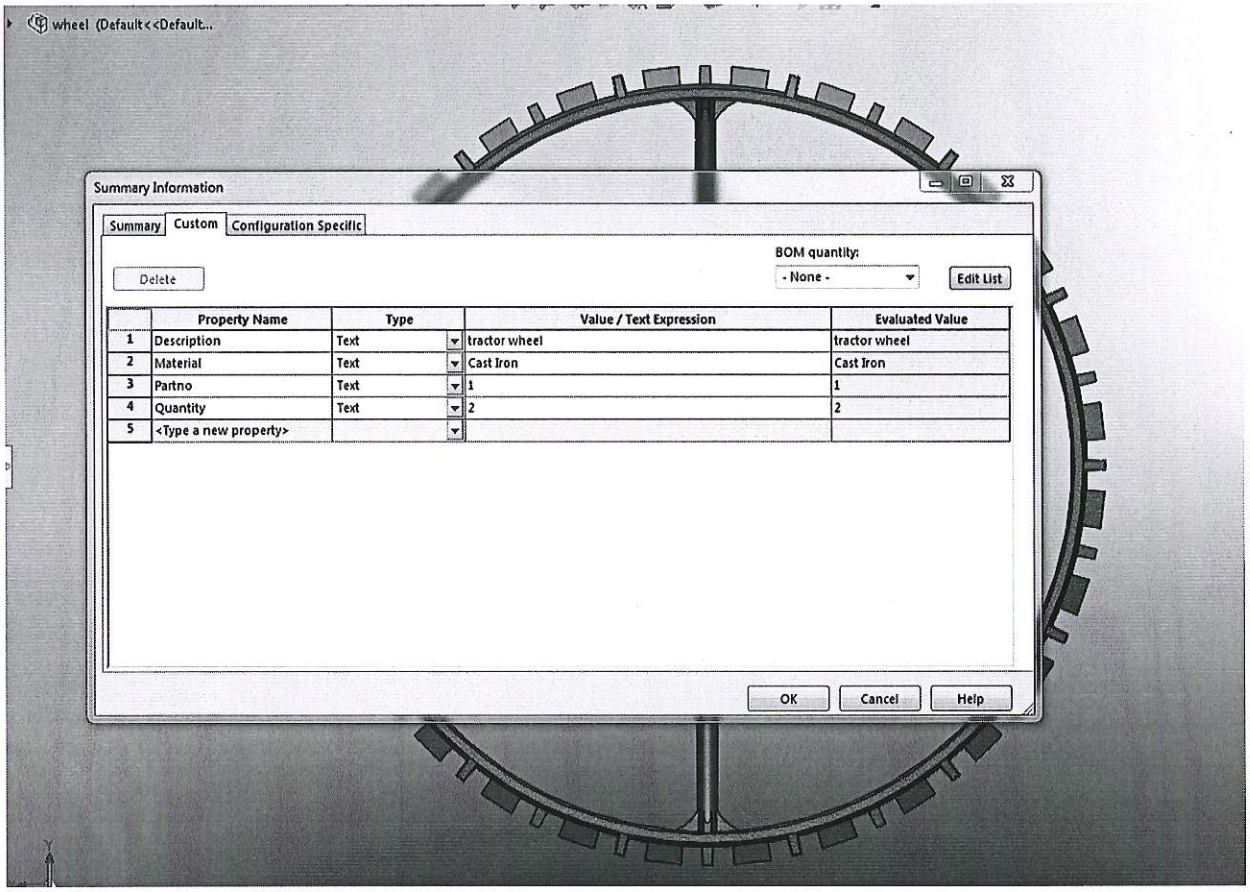

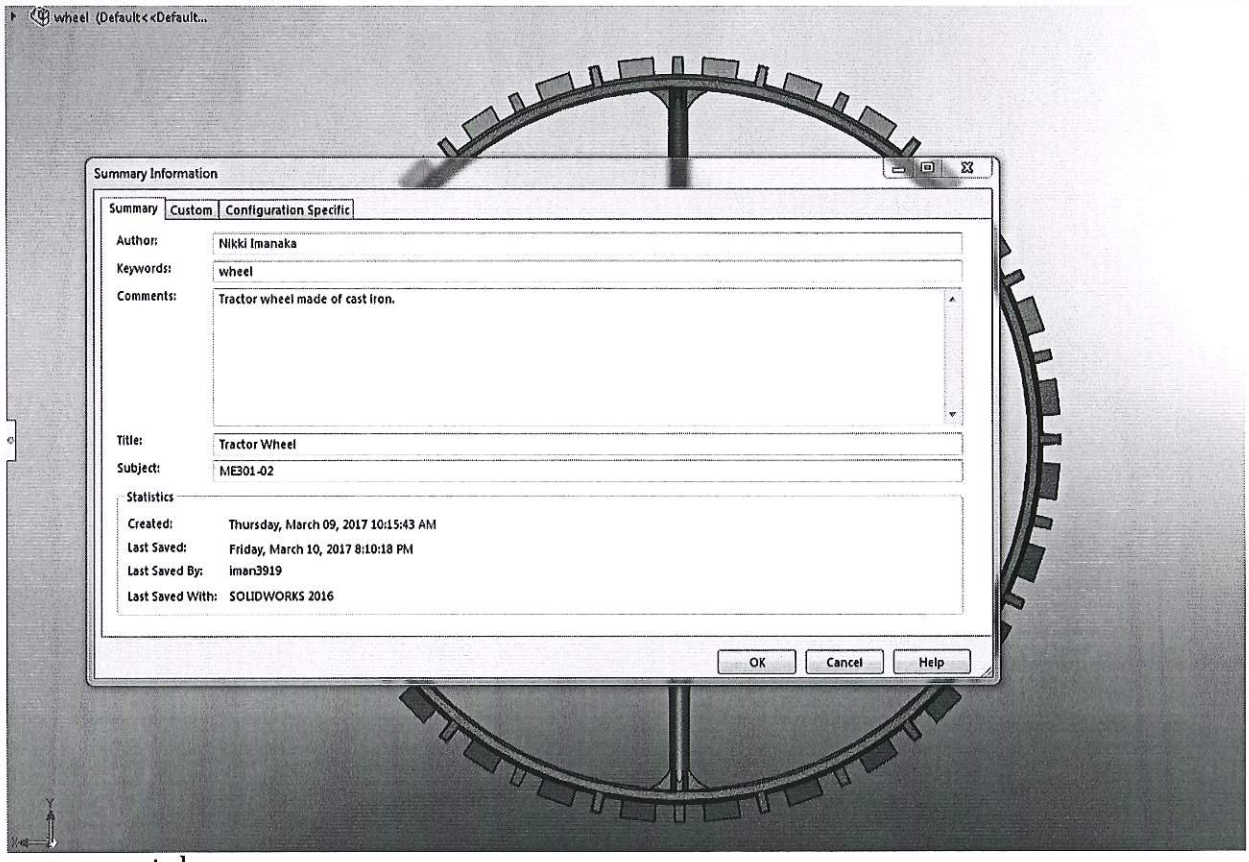

summary tabs

Mass Properties

wheel.SLDPRT

Options...

Override Mass Properties... | Recalculate

☑ Include hidden bodies/components

☐ Create Center of Mass feature

☐ Show weld bead mass

Report coordinate values relative to: -- default --

Mass properties of wheel
Configuration: Default
Coordinate system: -- default --

Density = 0.0072 grams per cubic millimeter

Mass = 52216.3561 grams

Volume = 7252271.6819 cubic millimeters

Surface area = 1226295.0639 square millimeters

Center of mass: (millimeters)
X = -0.0002
Y = 0.0002
Z = 8.3941

Principal axes of inertia and principal moments of inertia: (grams * square milli
Taken at the center of mass.

Ix = (0.7898, 0.6133, 0.0000)	Px = 3155281355.334
Iy = (-0.6133, 0.7898, 0.0000)	Py = 3155284013.392
Iz = (0.0000, 0.0000, 1.0000)	Pz = 6161610702.331

Moments of inertia: (grams * square millimeters)
Taken at the center of mass and aligned with the output coordinate system.

Lxx = 3155282351.9938	Lxy = 1290.1434	Lxz = -611.5077
Lyx = 1290.1434	Lyy = 3155283016.7331	Lyz = 920.6099
Lzx = -611.5077	Lzy = 920.6099	Lzz = 6161610702.33

Moments of inertia: (grams * square millimeters)
Taken at the output coordinate system.

Ixx = 3158961555.0260	Ixy = 1290.1418	Ixz = -698.3796
Iyx = 1290.1418	Iyy = 3158962219.7661	Iyz = 988.0830
Izx = -698.3796	Izy = 988.0830	Izz = 6161610702.33

Help | Print... | Copy to Clipboard

Lessons Learned:

I have learned that Solid Works crashes at the most inopportune times.

I also learned that drawings from the past were a little unclear. There were a lot of assumptions that I had to make because there was not enough information given on the drawing. For example, the ribs were given no dimensions except for the radius of the curve.

I think I'm learning how to manage the different sketches and features more easily now. I know how to hide things and show only the things I am working on so the others don't get in the way. I learned that making a section view is also good for clearing up the working view.

I learned how to use the cut revolve tool for the first time. It is pretty self-explanatory, but I used it to create the 4 degree angled slope on the some of the tracks.

I also learned that if you don't have meshed parts and features they cannot be patterned. For example, if you loft from a loft instead of a sketch it cannot be circular patterned.

The dimensions are mirrored for the tracks on the back half of the wheel.

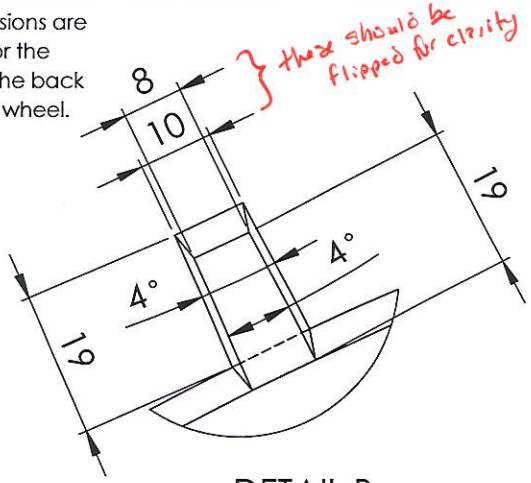

DETAIL B
SCALE 1 : 1

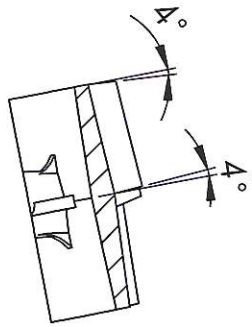

SECTION S-S
SCALE 1 : 5

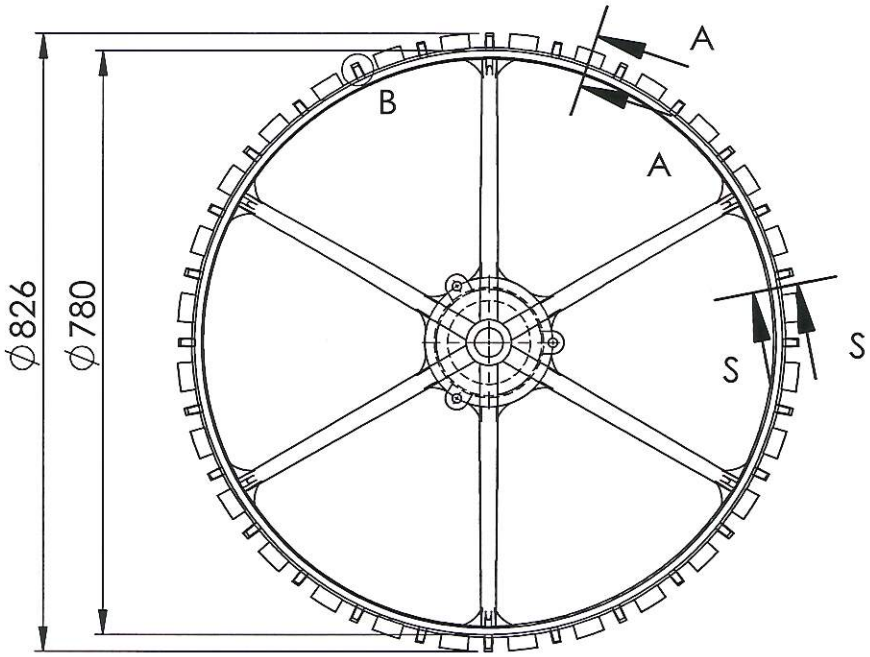

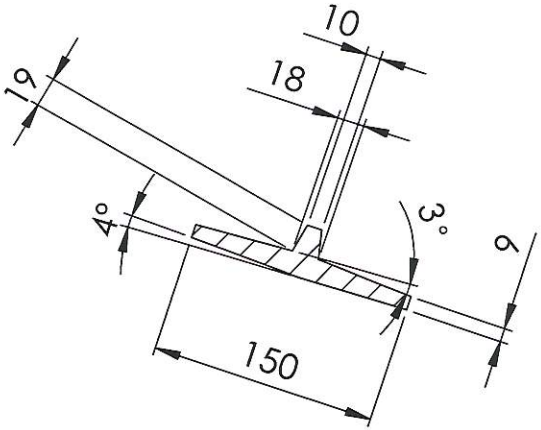

SECTION A-A
SCALE 1 : 5

PROPRIETARY AND CONFIDENTIAL
THE INFORMATION CONTAINED IN THIS DRAWING IS THE SOLE PROPERTY OF UNIVERSITY OF IDAHO, ME DEPARTMENT. ANY REPRODUCTION IN PART OR AS A WHOLE WITHOUT THE WRITTEN PERMISSION OF UNIVERSITY OF IDAHO, ME DEPARTMENT IS PROHIBITED.

DIMENSIONS ARE IN mm
THIRD ANGLE PROJECTION

MATERIAL: Cast Iron

WHEEEEL

DEFAULT TOLERANCES:

LINEAR:	ANGULAR:
X.±.25	X.± 2
X.X±.1	X.X± 1
X.XX±.01	X.XX± 0 30'
X.XXX±.002	

DESCRIPTION: tractor wheel
CHECKED BY: Brady Hislop DATE: 3/12/2017
DRAWN BY: Nikki Imanaka DATE: 3/12/2017
FILE NAME: wheeldraw.SLDPRT

UNIVERSITY OF IDAHO ME DEPARTMENT

PART #: 1 QTY: 2
SCALE: 1:10 SHEET: 1 OF 4

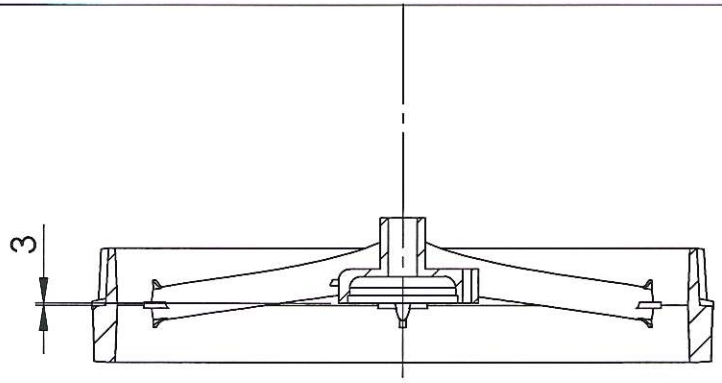

SECTION C-C

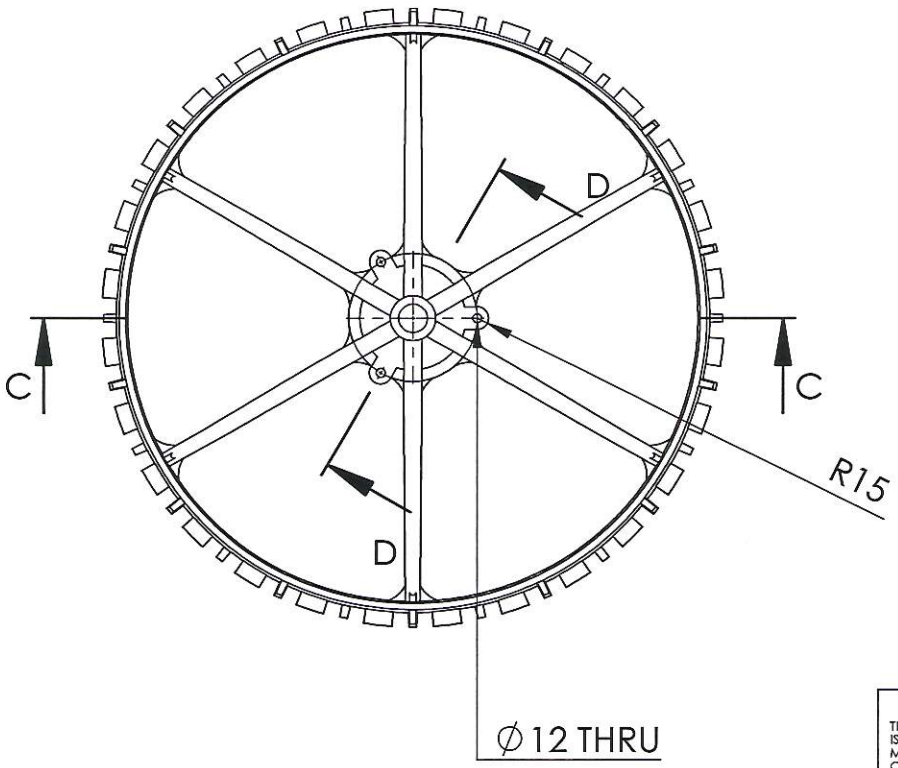

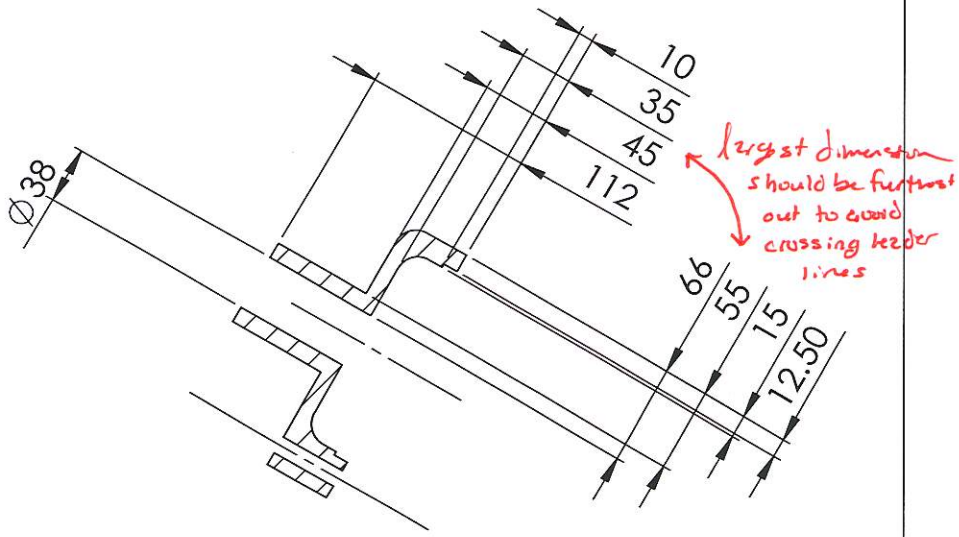

SECTION D-D
SCALE 1 : 5

PROPRIETARY AND CONFIDENTIAL THE INFORMATION CONTAINED IN THIS DRAWING IS THE SOLE PROPERTY OF UNIVERSITY OF IDAHO, ME DEPARTMENT. ANY REPRODUCTION IN PART OR AS A WHOLE WITHOUT THE WRITTEN PERMISSION OF UNIVERSITY OF IDAHO, ME DEPARTMENT IS PROHIBITED.	DIMENSIONS ARE IN mm THIRD ANGLE PROJECTION		WHEEEEL
	MATERIAL: Cast Iron		
DEFAULT TOLERANCES: LINEAR: X.±.25 X.X±.1 X.XX±.01 X.XXX±.002 ANGULAR: X.± 2 X.X± 1 X.XX± 0 30'	DESCRIPTION: tractor wheel		UNIVERSITY OF IDAHO ME DEPARTMENT
	CHECKED BY: Brady Hislop	DATE: 3/12/2017	
	DRAWN BY: Nikki Imanaka	DATE: 3/12/2017	PART #: 1 QTY: 2
	FILE NAME: wheeldraw.SLDPRT		SCALE: 1:10 SHEET: 2 OF 4

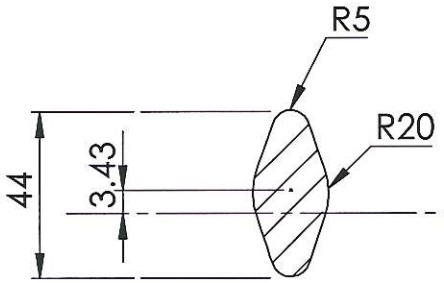

SECTION F-F
SCALE 1 : 2

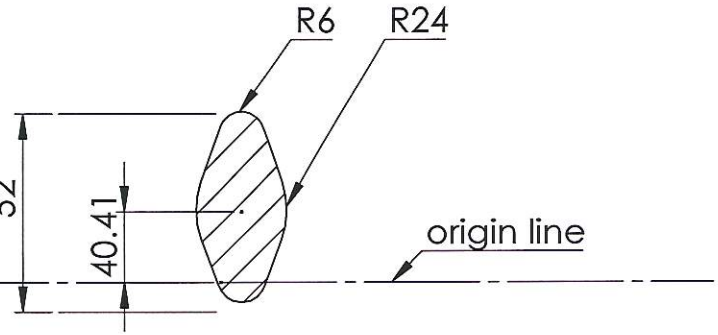

SECTION G-G
SCALE 1 : 2

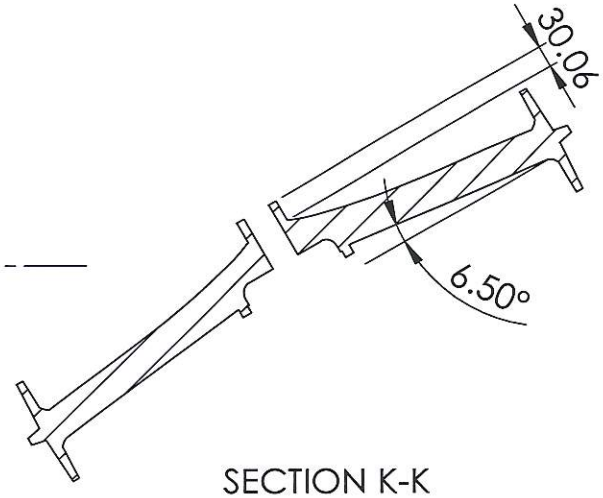

SECTION K-K

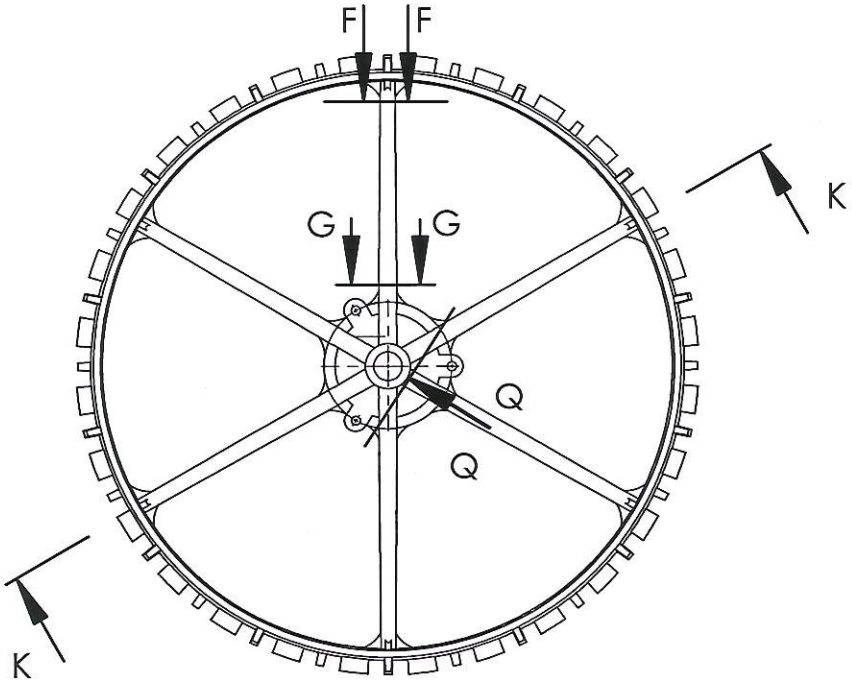

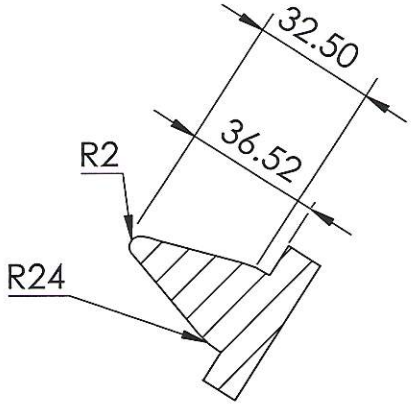

SECTION Q-Q
SCALE 1 : 2

PROPRIETARY AND CONFIDENTIAL

THE INFORMATION CONTAINED IN THIS DRAWING IS THE SOLE PROPERTY OF UNIVERSITY OF IDAHO, ME DEPARTMENT. ANY REPRODUCTION IN PART OR AS A WHOLE WITHOUT THE WRITTEN PERMISSION OF UNIVERSITY OF IDAHO, ME DEPARTMENT IS PROHIBITED.

DIMENSIONS ARE IN mm
THIRD ANGLE PROJECTION

MATERIAL: Cast Iron

WHEEEEL

DEFAULT TOLERANCES:

LINEAR:	ANGULAR:
X.±.25	X.± 2
X.X±.1	X.X± 1
X.XX±.01	X.XX± 0 30'
X.XXX±.002	

DESCRIPTION: tractor wheel

CHECKED BY: Brady Heslop DATE: 3/12/2017

DRAWN BY: Nikki Imanaka DATE: 3/12/2017

FILE NAME: wheeldraw.SLDPRT

UNIVERSITY OF IDAHO
ME DEPARTMENT

PART #: 1 QTY: 2

SCALE: 1:2 SHEET: 3 OF 4

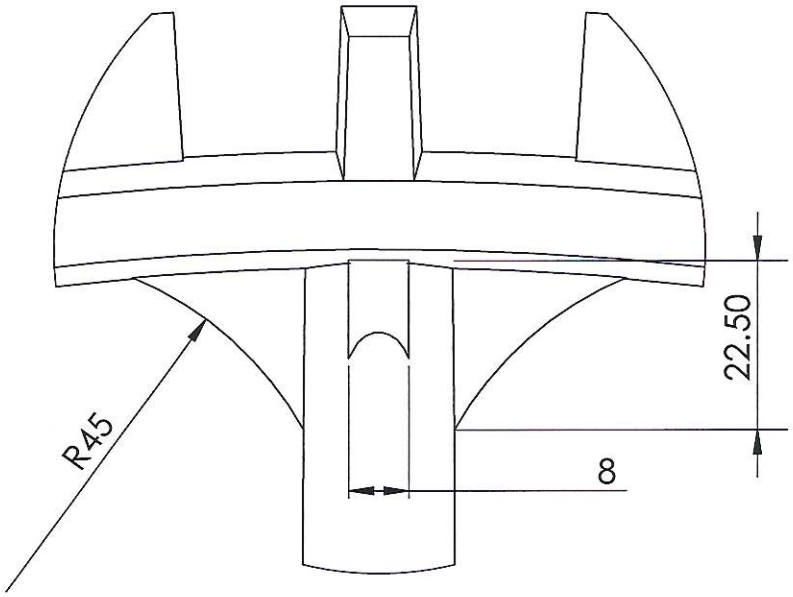

DETAIL T
SCALE 1 : 1

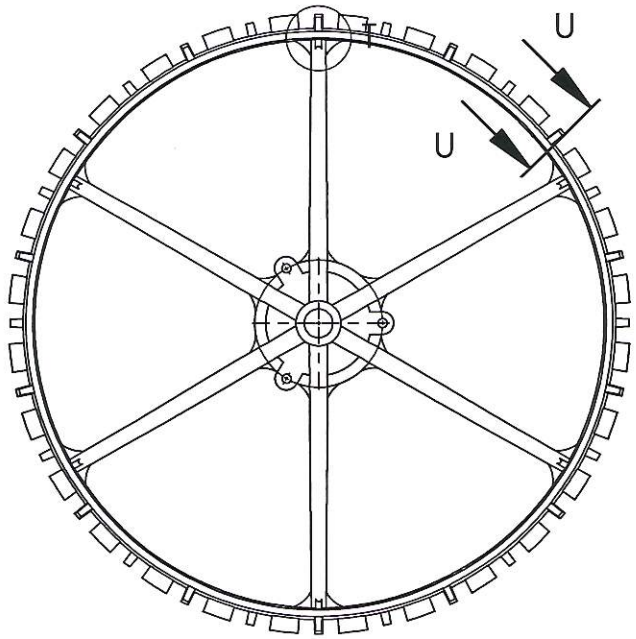

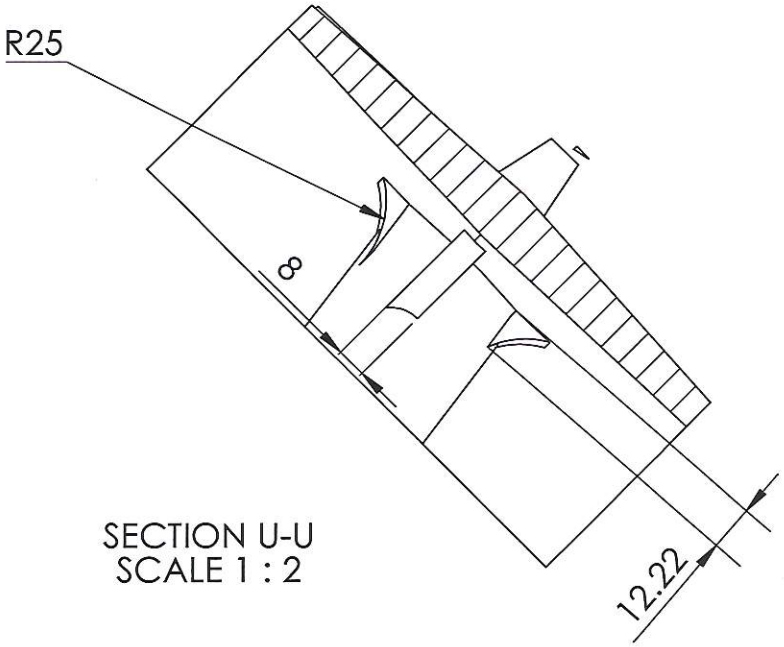

SECTION U-U
SCALE 1 : 2

PROPRIETARY AND CONFIDENTIAL
THE INFORMATION CONTAINED IN THIS DRAWING IS THE SOLE PROPERTY OF UNIVERSITY OF IDAHO, ME DEPARTMENT. ANY REPRODUCTION IN PART OR AS A WHOLE WITHOUT THE WRITTEN PERMISSION OF UNIVERSITY OF IDAHO, ME DEPARTMENT IS PROHIBITED.

DIMENSIONS ARE IN mm
THIRD ANGLE PROJECTION

MATERIAL: Cast Iron

WHEEEEL

DEFAULT TOLERANCES:

LINEAR:	ANGULAR:
X.±.25	X.± 2
X.X±.1	X.X± 1
X.XX±.01	X.XX± 0 30'
X.XXX±.002	

DESCRIPTION: tractor wheel
CHECKED BY: Brady Hislop DATE: 3/12/2017
DRAWN BY: Nikki Imanaka DATE: 3/12/2017
FILE NAME: wheeldraw.SLDPRT

UNIVERSITY OF IDAHO
ME DEPARTMENT

PART #: 1 QTY: 2
SCALE: 1:10 SHEET: 4 OF 4