Real Rankine Cycle with Superheat

Given: A steam power cycle with known properties and operating parameters as shown below.

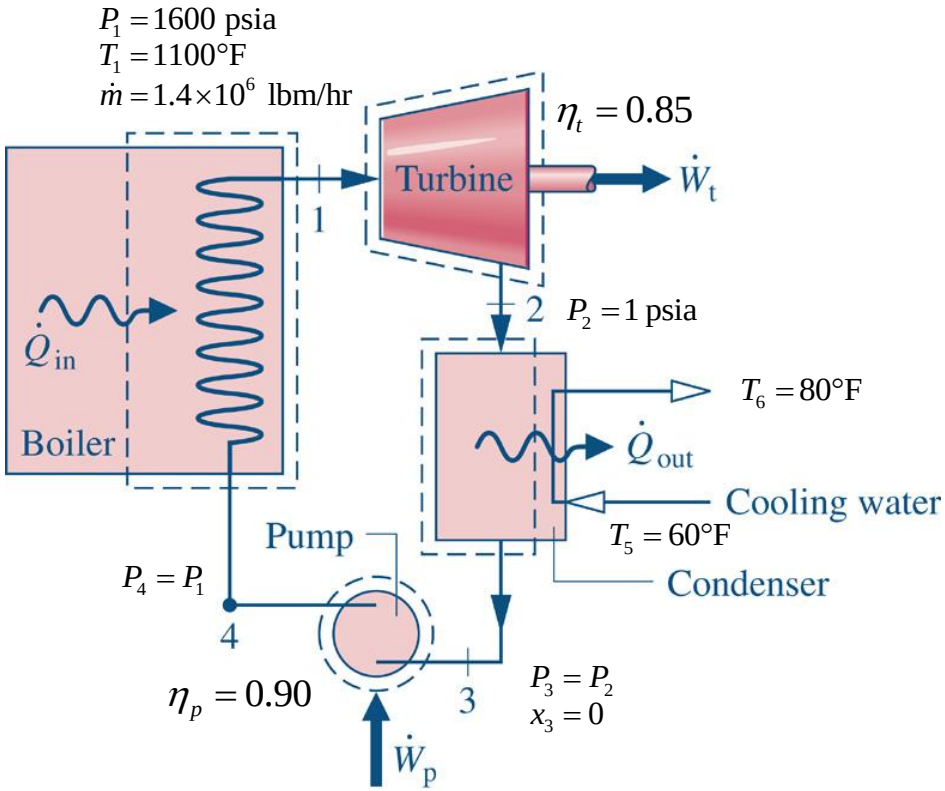

Find:

(a) The net power developed (hp)

(b) The thermal efficiency

(c) The heat rate

(d) The back work ratio

(e) The mass flow rate of the cooling water

Real World Example

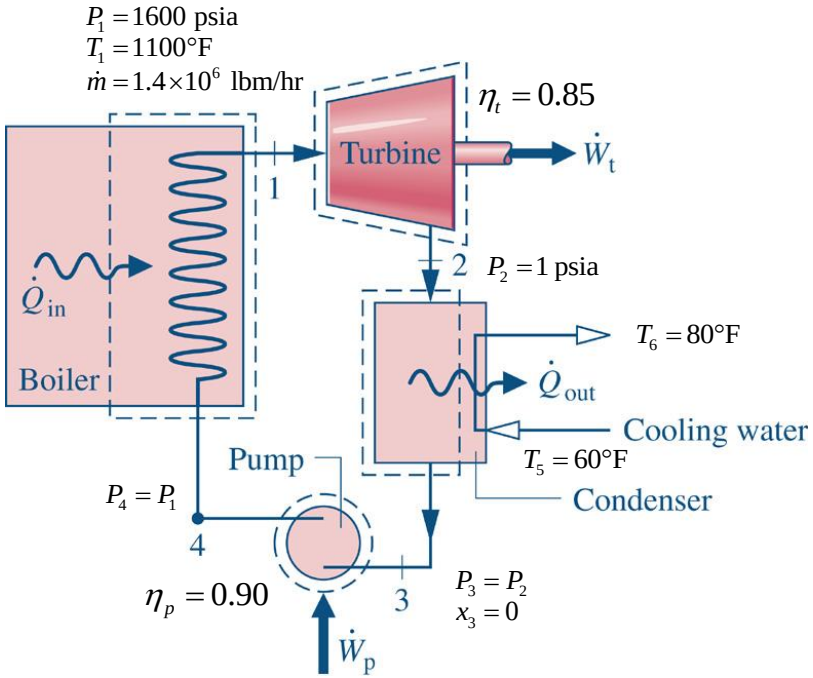


```
"GIVEN:  A steam power cycle with superheat as shown"

    s$ = 'steam_iapws'
    P[1] = 1600[psia]
    T[1] = 1100[F]
    P[2] = 1[psia]
    P[3] = P[2]
    x[3] = 0
    P[4] = P[1]
    T_5 = 60[F]
    T_6 = 80[F]
    m_dot = 1.4E6[lbm/hr]
    eta_t = 0.85
    eta_p = 0.90

"FIND: (a) The net power developed (hp)
       (b) The thermal efficiency of the cycle
       (c) The heat rate of the cycle
       (d) The back work ratio of the cycle
       (e) The mass flow rate of the cooling water (lbm/hr)"
```

Real World Example

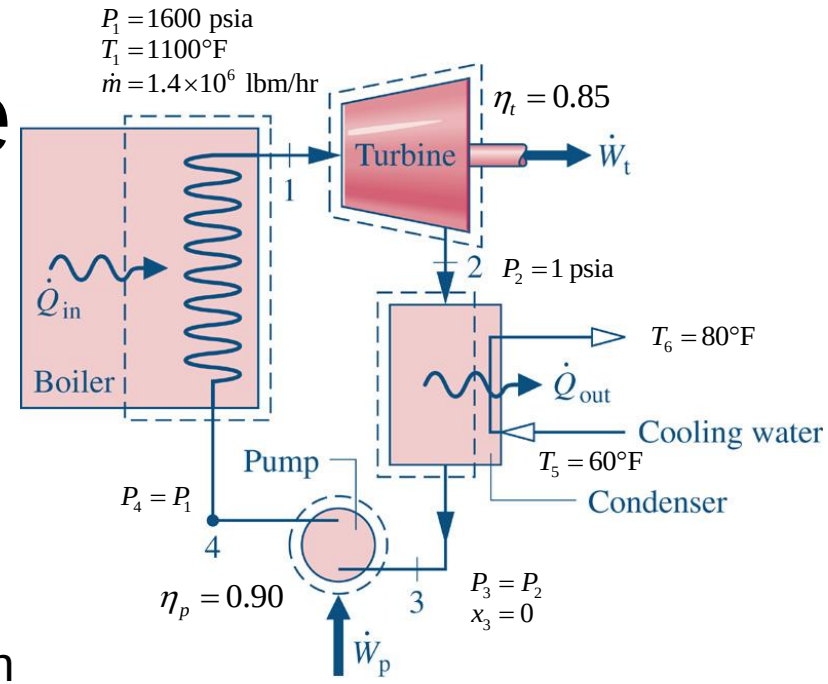

Strategy: Build a property table, then do the thermodynamics.

```
"!Building the property table"
"State 1:  P[1], T[1] are known"
    h[1] = enthalpy(s$,P=P[1],T=T[1])
    s[1] = entropy(s$,P=P[1],T=T[1])
    x[1] = quality(s$,P=P[1],T=T[1])

"Isentropic efficiency of the turbine.
 Allows for determination of h[2]"
    eta_t = (h[1] - h[2])/(h[1] - h_2s)

"State 2s:  P[2], s_2s = s[1] are known"
    h_2s = enthalpy(s$,P=P[2],s=s_2s)
    s_2s = s[1]

"State 2:  P[2], h[2] are known"
    T[2] = temperature(s$,P=P[2],h=h[2])
    s[2] = entropy(s$,P=P[2],h=h[2])
    x[2] = quality(s$,P=P[2],h=h[2])

"State 3:  P[3], x[3] are known"
    T[3] = temperature(s$,P=P[3],x=x[3])
    h[3] = enthalpy(s$,P=P[3],x=x[3])
    s[3] = entropy(s$,P=P[3],x=x[3])
```

Knowing the isentropic efficiency allows for the calculation of the actual exit enthalpy

```
"Isentropic efficiency of the pump.
 Allows for determination of h[4]"
    eta_p = (h_4s - h[3])/(h[4] - h[3])

"State 4s:  P[4], s_4s = s[3] are known"
    h_4s = enthalpy(s$,P=P[4],s=s_4s)
    s_4s = s[3]

"State 4:  P[4], h[4] are known"
    T[4] = temperature(s$,P=P[4],h=h[4])
    s[4] = entropy(s$,P=P[4],h=h[4])
    x[4] = quality(s$,P=P[4],h=h[4])
```

Arrays Table

Main

Sort	P_i [psia]	T_i [F]	h_i [Btu/lb$_m$]	s_i [Btu/lb$_m$-R]	x_i
[1]	1600	1100	1548	1.632	100
[2]	1	101.7	1007	1.802	0.9048
[3]	1	101.7	69.72	0.1326	0
[4]	1600	102.8	75.01	0.1336	-100

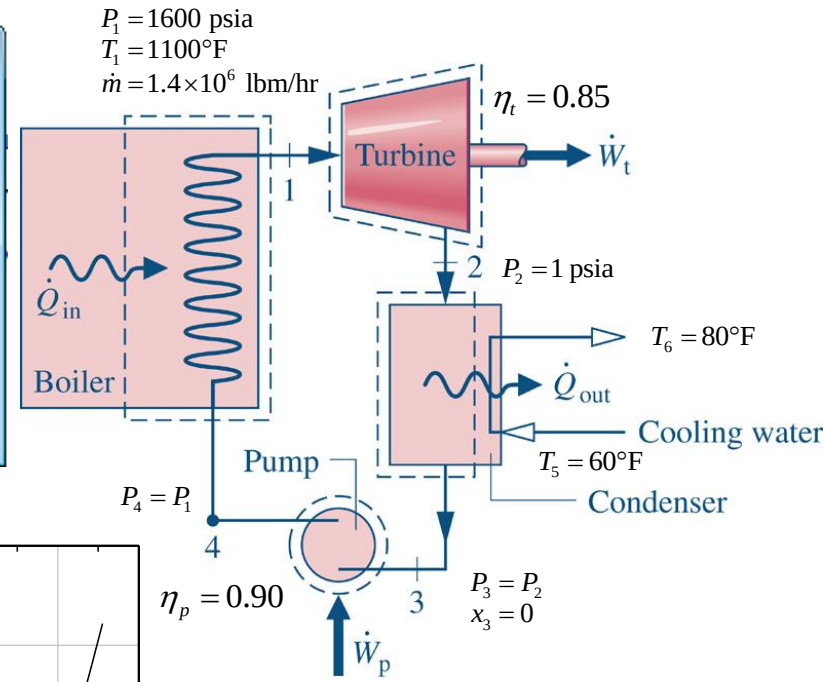

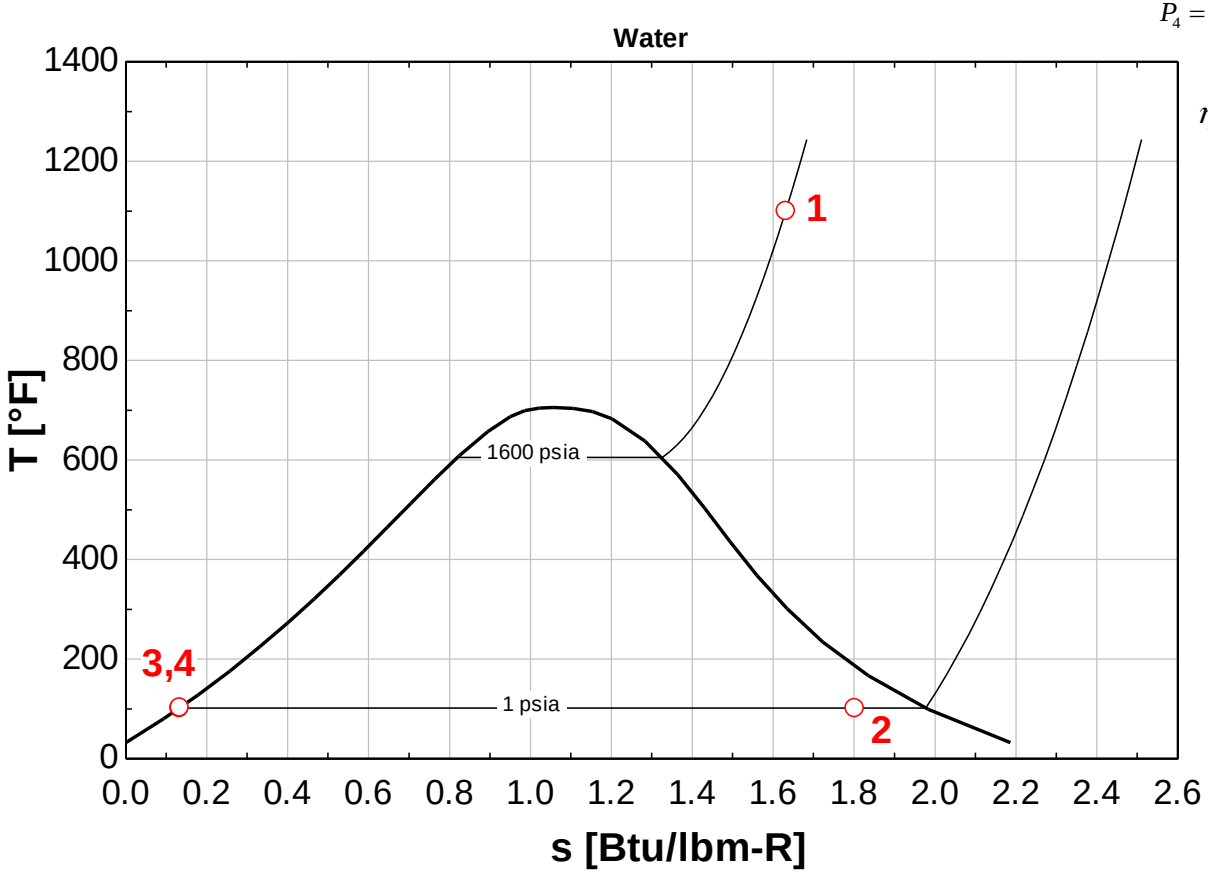

Now that the properties are all known, the thermodynamics is **EESy**!

Real World Example

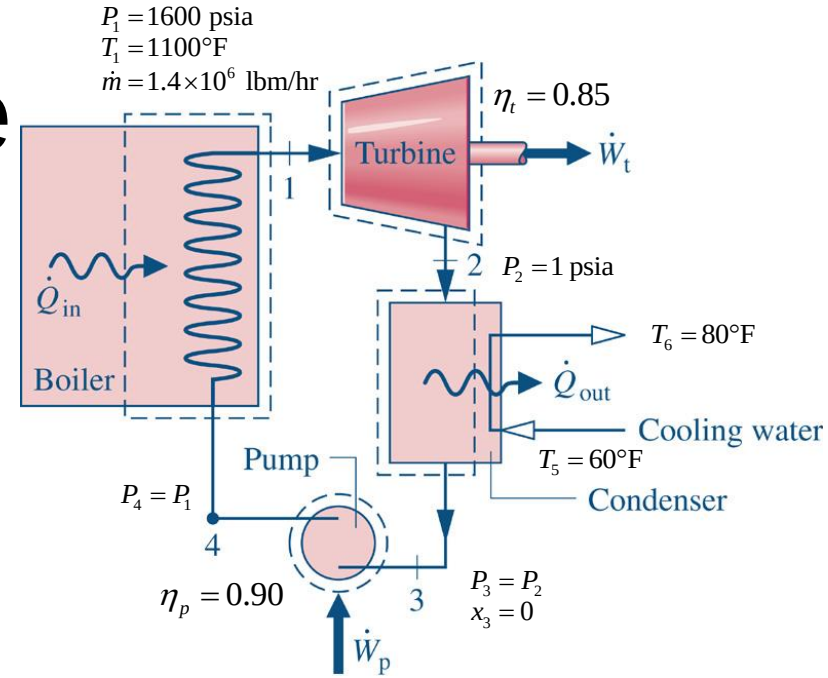


```
"!Now that the properties are all identified, the
 thermodynamics can be done!"
"The net power developed by the cycle is,"
    W_dot_net = W_dot_t - W_dot_p

"Applying the First Law to the turbine,"
    W_dot_t*convert(hp,Btu/hr) = m_dot*(h[1] - h[2])

"Applying the First law to the pump,"
    W_dot_p*convert(hp,Btu/hr) = m_dot*(h[4] - h[3])

"The thermal efficiency of the cycle is defined as,"
    eta_th = W_dot_net*convert(hp,Btu/hr)/Q_dot_in

"The heat transfer rate at the boiler is,"
    Q_dot_in = m_dot*(h[1] - h[4])

"The heat rate (HR) is defined as,"
    HR = Q_dot_in/(W_dot_net*convert(hp,kW))

"The back work ratio (bwr) is defined as,"
    bwr = W_dot_p/W_dot_t
```

```
"!Mass flow rate of the cooling water"
"To determine the cooling water flow rate, draw a system
 boundary that keeps the heat transferred between the
 condensing steam and the cooling water all internal.
 The First Law applied to this system is,"
    m_dot*(h[2] - h[3]) = m_dot_w*cp_w*(T_6 - T_5)

"The heat capacity of the liquid can be estimated as the
 saturated liquid value at the average temperature"
    T_avg = (T_5 + T_6)/2
    cp_w = cp(s$,T=T_avg,x=0)
```

Real World Example

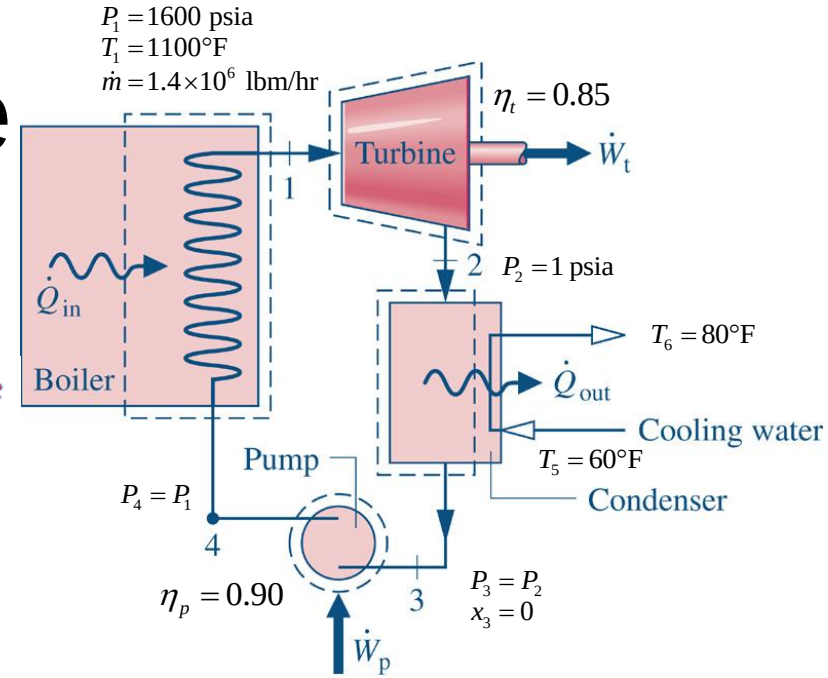

EES Result (Key Variables)

$\dot{m}$ = 1.400E+06 [lbm/hr]	*Mass flow rate of steam in the cycle*
$\dot{W}_t$ = 297718 [hp]	*Total turbine power delivery*
$\dot{W}_p$ = 2912 [hp]	*Pump power required*
$\dot{W}_{net}$ = 294806 [hp]	*Net power delivery from the cycle*
$\dot{Q}_{in}$ = 2.062E+09 [Btu/hr]	*Heat transfer rate at the boiler*
η_{th} = 0.3638	*Thermal efficiency of the cycle*
HR = 9380 [Btu/kW-hr]	*Heat rate of the cycle*
bwr = 0.009782	*Back work ratio of the cycle*
$\dot{m}_w$ = 6.565E+07 [lbm/hr]	*Mass flow rate of cooling water*

Rankine vs. Real Cycle Comparison

Rankine Cycle

Arrays Table

Main

Sort	P_i [psia]	T_i [F]	h_i [Btu/lb$_m$]	s_i [Btu/lb$_m$-R]	x_i
[1]	1600	1100	1548	1.632	100
[2]	1	101.7	911.4	1.632	0.8126
[3]	1	101.7	69.72	0.1326	0
[4]	1600	102.3	74.49	0.1326	-100

Steam Power Cycle with Turbine and Pump Irreversibilities

Arrays Table

Main

Sort	P_i [psia]	T_i [F]	h_i [Btu/lb$_m$]	s_i [Btu/lb$_m$-R]	x_i
[1]	1600	1100	1548	1.632	100
[2]	1	101.7	1007	1.802	0.9048
[3]	1	101.7	69.72	0.1326	0
[4]	1600	102.8	75.01	0.1336	-100

Rankine vs. Real Cycle Comparison

Rankine Cycle		Steam Cycle
$\dot{m}$ = 1.400E+06 [lbm/hr]	*Mass flow rate of steam in the cycle*	$\dot{m}$ = 1.400E+06 [lbm/hr]
$\dot{W}_t$ = 350257 [hp]	*Total turbine power delivery*	$\dot{W}_t$ = 297718 [hp]
$\dot{W}_p$ = 2621 [hp]	*Pump power required*	$\dot{W}_p$ = 2912 [hp]
$\dot{W}_{net}$ = 347636 [hp]	*Net power delivery from the cycle*	$\dot{W}_{net}$ = 294806 [hp]
$\dot{Q}_{in}$ = 2.063E+09 [Btu/hr]	*Heat transfer rate at the boiler*	$\dot{Q}_{in}$ = 2.062E+09 [Btu/hr]
η_{th} = 0.4288	*Thermal efficiency of the cycle*	η_{th} = 0.3638
HR = 7957 [Btu/kW-hr]	*Heat rate of the cycle*	HR = 9380 [Btu/kW-hr]
bwr = 0.007483	*Back work ratio of the cycle*	bwr = 0.009782
$\dot{m}_w$ = 5.896E+07 [lbm/hr]	*Mass flow rate of cooling water*	$\dot{m}_w$ = 6.565E+07 [lbm/hr]