Overview

MAGFLO family

MAGFLO electromagnetic flowmeters are designed for measuring the flow of electrically conductive mediums.

The patented MAGFLO Verificator guarantees accurate measurement and simple verification.

Benefits

Greater flexibility

- Wide product program
- Compact or remote installation using the same transmitter and sensor
- USM II communication platform for easy integration with all systems

Easier to commission

All MAGFLO electromagnetic flowmeters feature a unique SENSORPROM memory unit which stores sensor calibration data and transmitter settings for the lifetime of the product.

At commissioning the flowmeter commences measurement without any initial programming.

The factory settings matching the sensor size are stored in the SENSORPROM unit. Also customer specified settings are downloaded to the unit. Should the transmitter be replaced, the new transmitter will upload all previous settings and resume measurement without any need for reprogramming.

Further, the "fingerprint" used in connection with the MAGFLO Verificator is stored during the initial sensor calibration.

Easier to service

Transmitter replacement requires no programming. SENSORPROM automatically updates all settings after initialization.

Room for growth

USM II the Universal Signal Module with "plug & play" simplicity makes it easy to access and integrate the flow measurement with almost any system and bus-protocol and it ensures the flowmeter will be easy to upgrade to future communication/bus platforms.

Application

Electromagnetic flowmeters are suitable for measuring the flow of almost all electrically conducting liquids, sludges, pastes and slurries.

A prerequisite is that the medium must have a minimum conductivity of 5 µS/cm. The temperature, pressure, density and viscosity have no influence on the result.

The main applications of the electromagnetic flowmeters can be found in the following sectors:

- Water and waste water
- Chemical and pharmaceutical industries
- Food and beverage industry
- Mining, aggregates and cements
- Pulp and paper
- Steel industry
- Power; Utility and Chilled water

The wide variety of combinations and versions from the modular system means that ideal adaptation is possible to each measuring task.

System information MAGFLO electromagnetic flowmeters

Function

All electromagnetic flowmeters are based on Faraday's law of induction:

$U_M = B \cdot v \cdot d \cdot k$

U_M = Measured voltage induced in the medium perpendicular to the magnetic field and the flow direction. The voltage is tapped at two point electrodes.

B = Magnetic flux density which permeates the flowing medium perpendicular to the flow direction.

v = flow velocity of medium

d = internal diameter of metering tube

k = proportionality factor or sensor constant

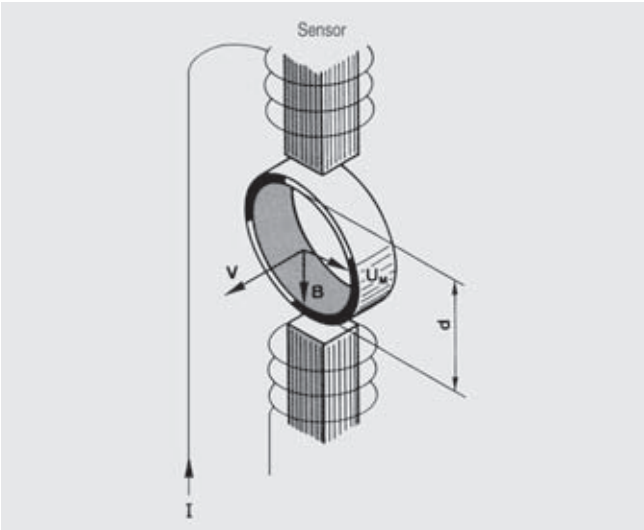

Function and measuring principle of electromagnetic measurement

An electromagnetic flowmeter generally consists of a magnetically non-conducting metering tube with an internal electrically non-conducting surface, magnet coils connected in series and mounted diametrically on the tube, and at least two electrodes which are inserted through the pipe wall and are in contact with the measured medium. The magnet field coils through which the current passes generate a pulsed electromagnetic field with the magnetic flux density B perpendicular to the pipe axis.

This magnetic field penetrates the magnetically non-conducting metering tube and the medium flowing through it, which must have a minimum electrical conductivity.

According to Faraday's law of induction, a voltage U_M is generated in an electrically conducting medium, and is proportional to the flow velocity v of the medium, the magnetic flux density B, and the distance between the electrodes d (internal diameter of pipe).

The signal voltage U_M is tapped by the electrodes which are in contact with the medium, and passed through the insulating pipe wall. The signal voltage U_M which is proportional to the flow velocity is converted by an associated transmitter into appropriate standard signals such as 4 to 20 mA.

MAGFLO diagnostics and verification

The function is build around two steps:

- Application and meter
- System verification (external device)

Diagnostics:

- Identification in clear text and error log.
- Error categories: function; warning; permanent and fatal errors
- Transmitter self-check including all outputs and the accuracy
- Sensor check: coil and electrode circuit test
- Overflow
- Empty pipe: partial filling; low conductivity; electrode fouling

MAGFLO Verificator

The diagnostic functions are all internal tools in the meter checking different parts individually.

The MAGFLO Verificator is an external tool designed for all MAGFLO products to verify the entire product, the installation and the application.

Our goal is to improve your operation, reduce downtime and maintain measurement accuracy as long as possible.

Thus we have developed the SIEMENS MAGFLO Verificator a highly advanced instrument to carry out the complex verification and performance check of the entire flowmeter system, according to unique SIEMENS patented principles. The whole verification test is automated and easy to operate so there is no opportunity for human error or influence. The system is traceable to international standards and tested by WRc.

MAGFLO Verificator

The MAGFLO Verificator consists of:

- a stand alone Verificator to measure a number of selected parameters in the flow sensor and a transmitter which affects the integrity of the flow measurement
- a Windows based PC programme enabling printing and management of verification reports.

Verification

Verification of a SITRANS F M MAGFLO flowmeter consists of the following test routines:
1. Transmitter test
2. Flow meter insulation test
3. Sensor magnetism test

1. Transmitter test

The transmitter test is the traditional way of on-site testing on the market. Siemens patented "insulation" and "sensor magnetism" test ensures the performance of the whole signal chain.

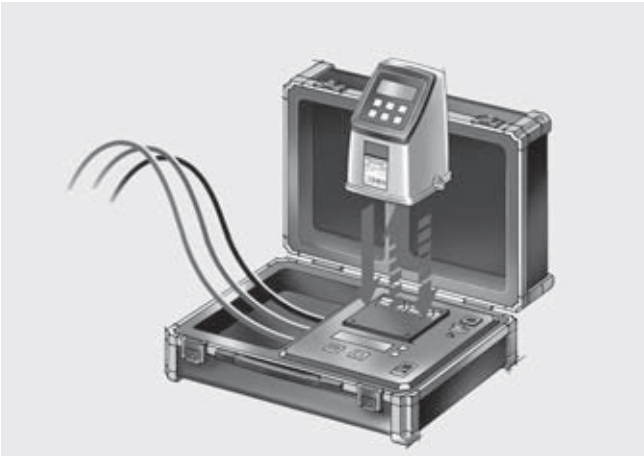

Transmitter test

The transmitter verification checks the whole electronic system from signal input to output. Using the excitation power output, which is generated to drive the magnetic field of the sensor, the verificator simulates flow signal to the transmitter input. By measuring the transmitter outputs the verificator calculates its accuracy against defined values. Test includes:

- excitation power to drive the magnetic field
- signal function from signal input to output
- signal processing – gain, offset and linearity
- test of analogue and frequency output

2. Insulation test

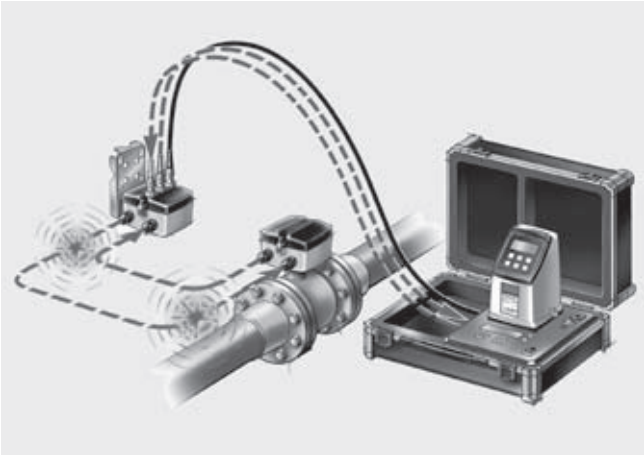

Flow meter insulation test

The verification test of the flowmeter insulation is a "cross-talk" test of the entire flowmeter which ensures that the flow signal generated in the sensor is not affected by any external influences.

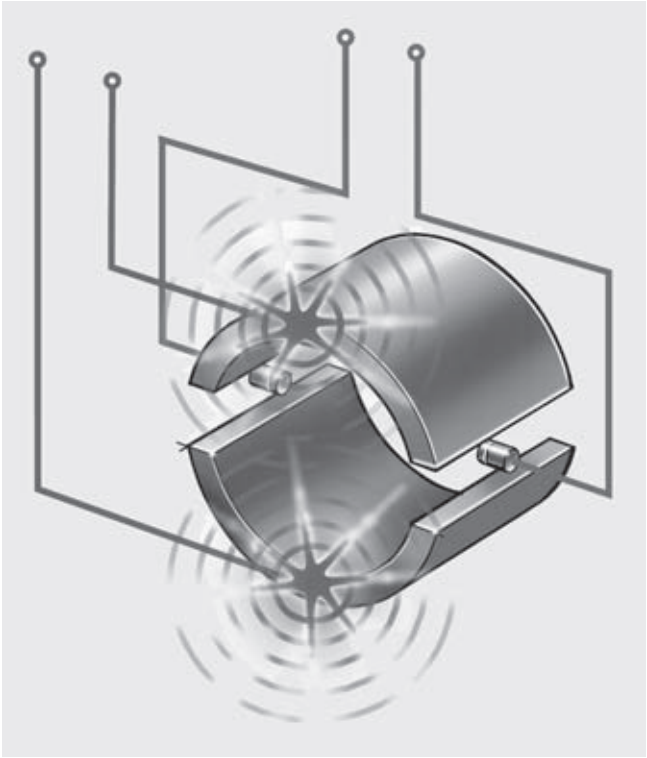

Signal disturbance coil

Signal disturbance outside

In the "cross-talk" test the verificator generates a high voltage disturbance within the coil circuit and then looks for any "crosstalk" induced in the flow signal circuit. By generating dynamic disturbances close-coupled to the flow signal, the flowmeter is tested for noise immunity to a maximum level:

- EMC influence on the flow signal
- Moisture in sensor, connection and terminal box
- Non-conductive deposit coating the electrodes within the sensor
- Missing or poor grounding, shielding and cable connection.

System information MAGFLO electromagnetic flowmeters

3. Sensor magnetism test

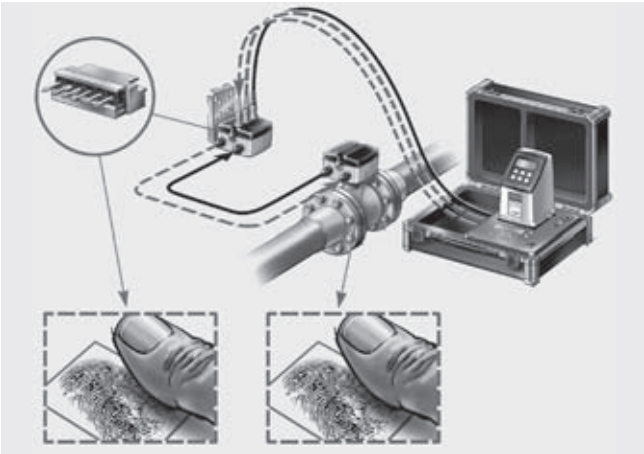

Sensor magnetism test

The verification of the sensor magnetism is a "boost" test of the magnetic field coil. The test ensures that the magnetism behaviour is like the first time, by comparing the current sensor magnetism with the "fingerprint" which was determined during initial calibration and stored in the SENSORPROM memory unit.

In the "Boost" test the verificator changes the magnetic field in certain pattern and with high voltage to get quick stable magnetic condition. This unique test is fulfilleld without any interference or compansation of surrounding temperature or interconnecting cabling.

- Changes in dynamic magnetic behaviour
- Magnetic influence inside and outside the sensor
- Missing or poor coil wire and cable connection

Certificate

The test certificate generated by a PC contains:

- Test result with passed or failed
- Installation specification
- Flowmeter specification and configuration
- Verificator specification with date of calibration ensuring traceability to international standards.

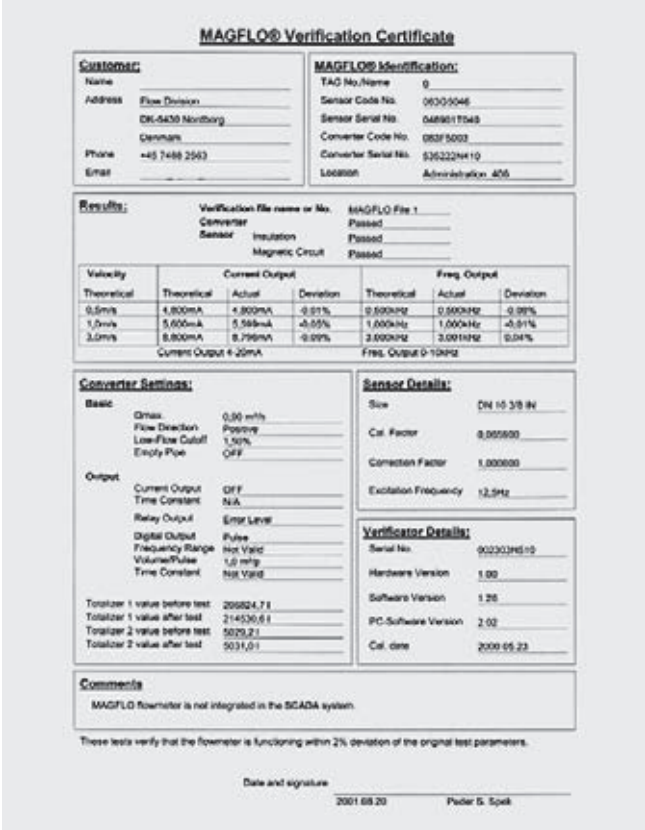

MAGFLO® Verification Certificate

Customer:

Name	
Address	Flow Division
	DK-5450 Nordborg
	Denmark
Phone	+45 7488 2563
Email	

MAGFLO® Identification:

TAG No./Name	0
Sensor Code No.	06305046
Sensor Serial No.	0489017049
Converter Code No.	0B3F5003
Converter Serial No.	536322N410
Location	Administration 406

Results:

Verification file name or No.		MAGFLO File 1
Converter		Passed
Sensor	Insulation	Passed
	Magnetic Circuit	Passed

Velocity	Current Output			Freq. Output		
Theoretical	Theoretical	Actual	Deviation	Theoretical	Actual	Deviation
0,5m/s	4,800mA	4,800mA	-0,01%	0,500kHz	0,500kHz	-0,08%
1,0m/s	5,600mA	5,598mA	-0,05%	1,000kHz	1,000kHz	-0,01%
3,0m/s	8,800mA	8,796mA	-0,05%	3,000kHz	3,001kHz	0,04%

Current Output 4-20mA — Freq. Output 0-10kHz

Converter Settings:

Basic

Qmax.	0,00 m³/h
Flow Direction	Positive
Low-Flow Cutoff	1,50%
Empty Pipe	OFF

Output

Current Output	OFF
Time Constant	N/A
Relay Output	Error Level
Digital Output	Pulse
Frequency Range	Not Valid
Volume/Pulse	1,0 m³/p
Time Constant	Not Valid

Totalizer 1 value before test	206824,7 l
Totalizer 1 value after test	214530,6 l
Totalizer 2 value before test	5029,21
Totalizer 2 value after test	5031,01

Sensor Details:

Size	DN 10 3/8 IN
Cal. Factor	0,005500
Correction Factor	1,000000
Excitation Frequency	12,5Hz

Verificator Details:

Serial No.	902303H510
Hardware Version	1.00
Software Version	1.26
PC-Software Version	2.02
Cal. date	2000.05.23

Comments

MAGFLO flowmeter is not integrated in the SCADA system.

These tests verify that the flowmeter is functioning within 2% deviation of the original test parameters.

Date and signature

2001.08.20 Peder S. Spæk

Technical specifications

Flowmeter uncertainty

To ensure continuous accurate flow measurement, flowmeters must be calibrated. MAGFLO calibration is conducted at SIEMENS flow facilities accredited according to ISO 17025 (EN 45001 EA) by UKAS and DANAK and traceable to various international standards as well as NIST. A calibration certificate is shipped with every sensor and calibration data are stored in the SENSORPROM memory unit.

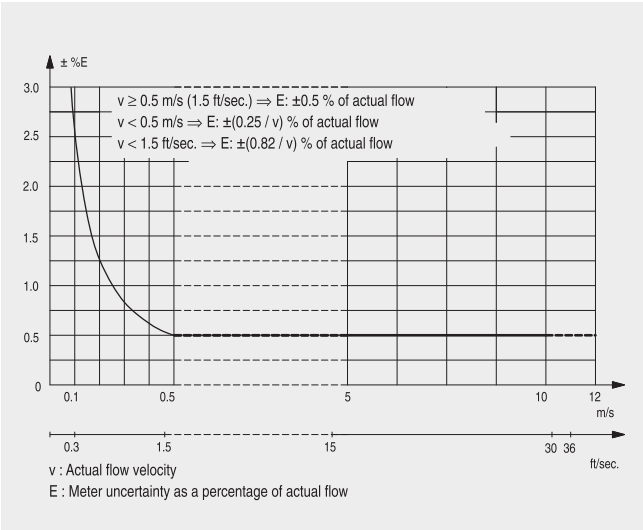

Flowmeter uncertainty, MAG 5000, MAG 6000 or MAG 6000 I used with MAG 3100 W or MAG 1100 PFA

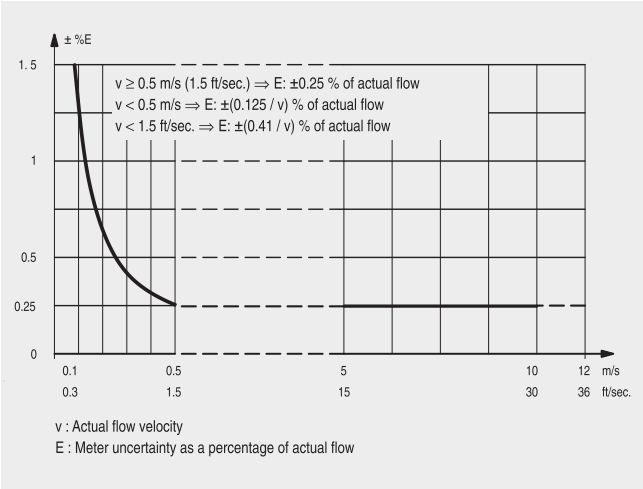

Flowmeter uncertainty, MAG 5000, MAG 6000 or MAG 6000 used with MAG 3100, MAG 1100 Ceramic or MAG 5100 W

Reference conditions

Reference conditions (ISO 9104 and DIN EN 29104)	
Temperature of medium	20 °C ± 5 K (68 °F ± 9 °F)
Ambient temperature	20 °C ± 5 K (68 °F ± 9 °F)
Supply voltage	U_n ± 1%
Warming-up time	30 minutes
Incorporation in pipe section	
• Inlet section	10 x DN (DN ≤ 1200/48”) 5 x DN (DN > 1200/48“)
• Outlet section	5 x DN (DN ≤ 1200/48”) 3 x DN (DN > 1200/48“)
Flow conditions	Fully developed flow profile

Additions in the event of deviations from reference conditions	
Current output	As pulse output (± 0.1 % of actual flow + 0.05 % FSO)
Effect of ambient temperature	
• Display / frequency / pulse output	< ±0.003% / K act.
• Current output	< ±0.005% / K act.
Effect of supply voltage	< 0.005% of measuring value on 1% change
Repeatability	± 0.1% of actual flow for v ≥ 0.5 m/s (1.5 ft/s) and conductivity > 10 µS/cm

System information MAGFLO electromagnetic flowmeters

Selection of sensor

DN sensors (metric)

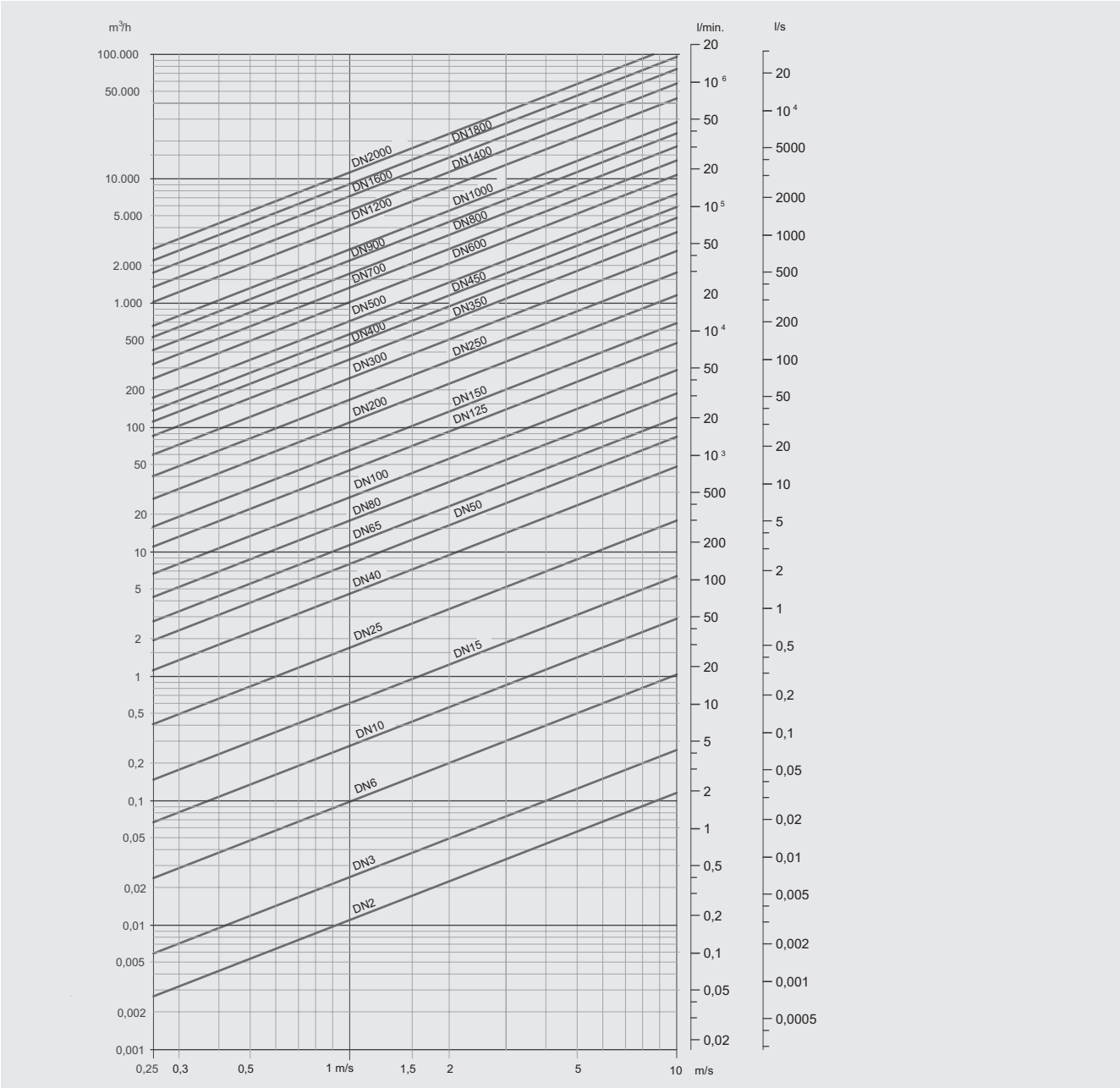

Sizing table (DN 2 … DN 2000)

The table shows the relationship between flow velocity v, flow quantity Q and sensor dimension DN.

Guidelines for selection of sensor

Min. measuring range: 0 … 0.25 m/s

Max. measuring range: 0 … 10 m/s

Normally the sensor is selected so that nominal flow velocity v lies within the measuring range 1 … 3 m/s.

Flow velocity calculation formula	Units
$v = 1273.24 \cdot Q / DN^2$ or	v : [m/s], Q : [l/s], DN : [mm]
$v = 353.68 \cdot Q / DN^2$	v : [m/s], Q : [m³/h], DN : [mm]

Inch sensors

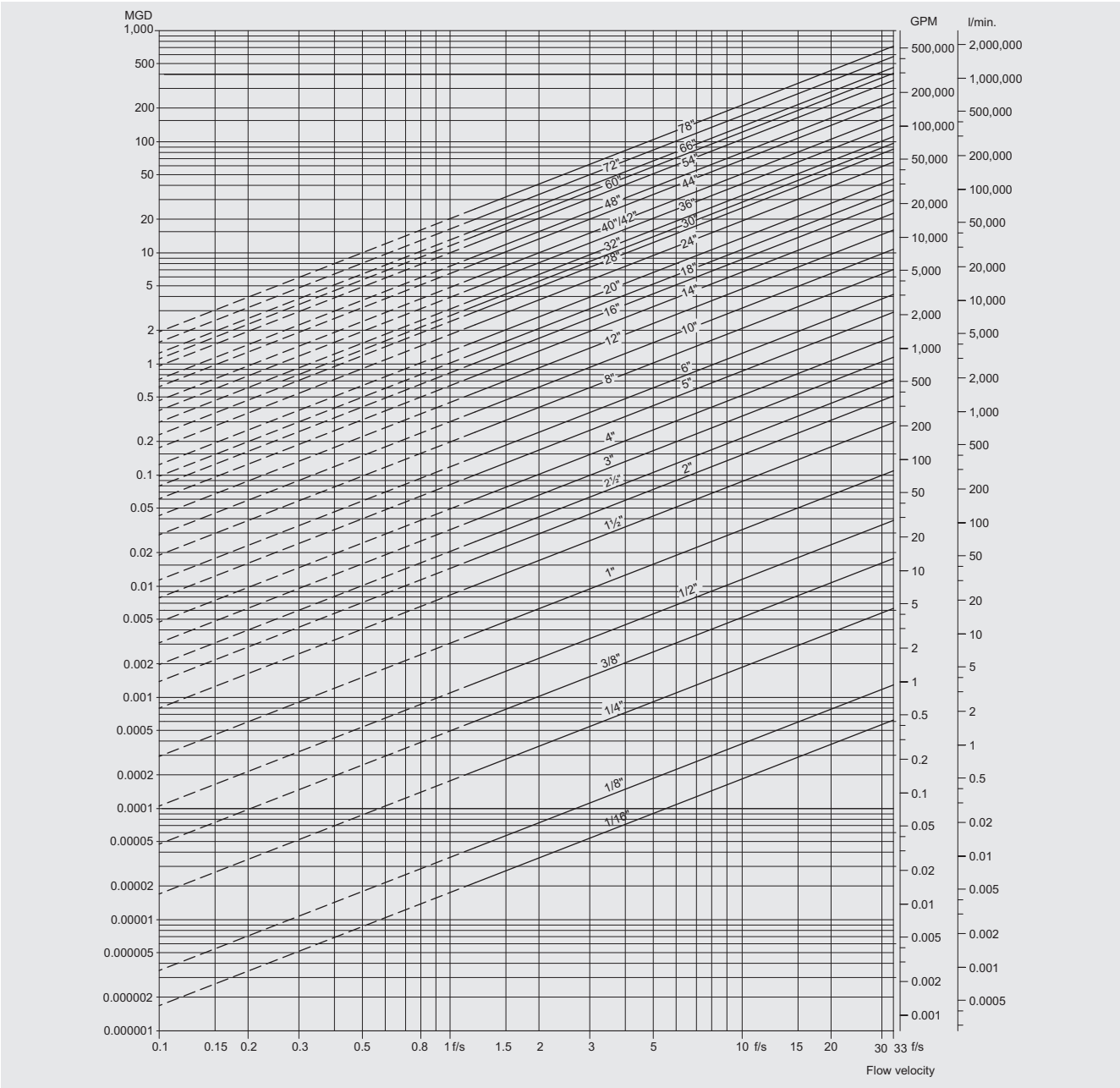

Sizing table ($^{1}/_{16}$" … 78")

The table shows the relationship between flow velocity v, flow quantity Q and sensor dimension size.

Guidelines for selection of sensor

Min. measuring range: 0 … 0.8 ft/s

Max. measuring range: 0 … 33 ft/s

Normally the sensor is selected so that nominal flow velocity v lies within the measuring range 3 … 10 ft/s.

Flow velocity calculation formula	Units
$v = 0.408 \cdot Q / (\text{Pipe I.D.})^2$ or	v : [ft/s], Q : [GPM], Pipe I.D. : [inch]
$v = 283.67 \cdot Q / (\text{Pipe I.D.})^2$	v : [ft/s], Q : [GPM], Pipe I.D. : [inch]

System information MAGFLO electromagnetic flowmeters

Installation conditions

The sensor must always be completely full with liquid.

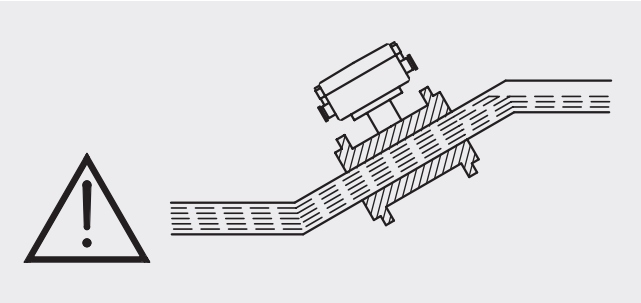

Install in pipelines which are always full

The sensor must always be completely filled with liquid. Therefore avoid:

- Installation at the highest point in the pipe system
- Installation in vertical pipes with free outlet

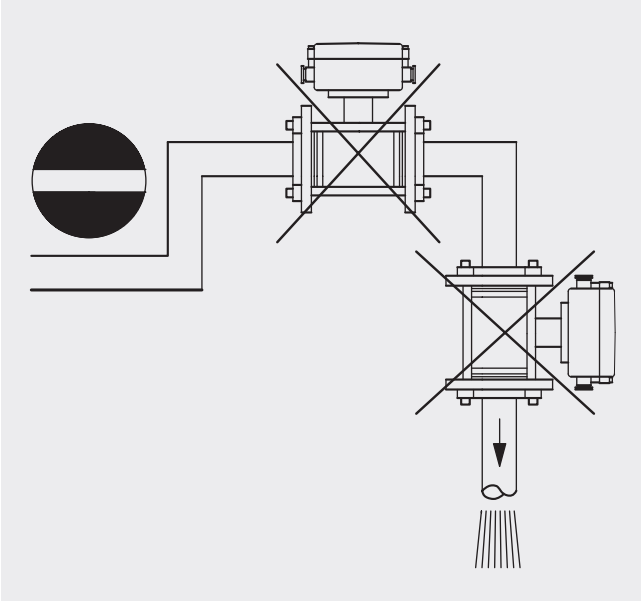

Do not install in pipelines which can run empty

For partially filled pipes or pipes with downward flow and free outlet the flowmeter should be located in a U-Tube.

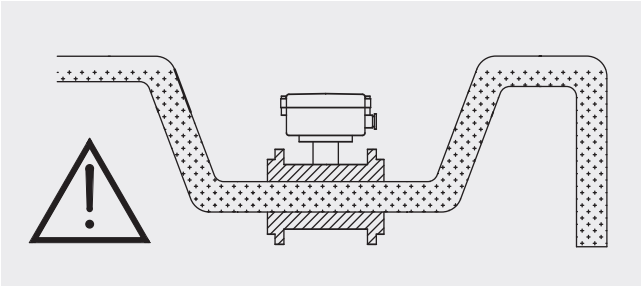

Install in U-tubes when pipe is partially filled

Installation in vertical pipes

Recommended flow direction: upwards. This minimizes the effect on the measurement of any gas/air bubbles in the liquid.

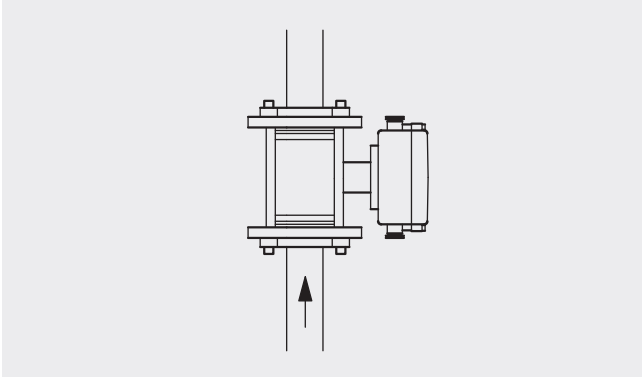

Install in vertical pipes with upward flow direction

Installation in horizontal pipes

The sensor must be mounted as shown in the upper figure. Do not mount the sensor as shown in the lower figure. This will position the electrodes at the top where there is possibility for air bubbles and at the bottom where there is possibility for mud, sludge, sand etc.

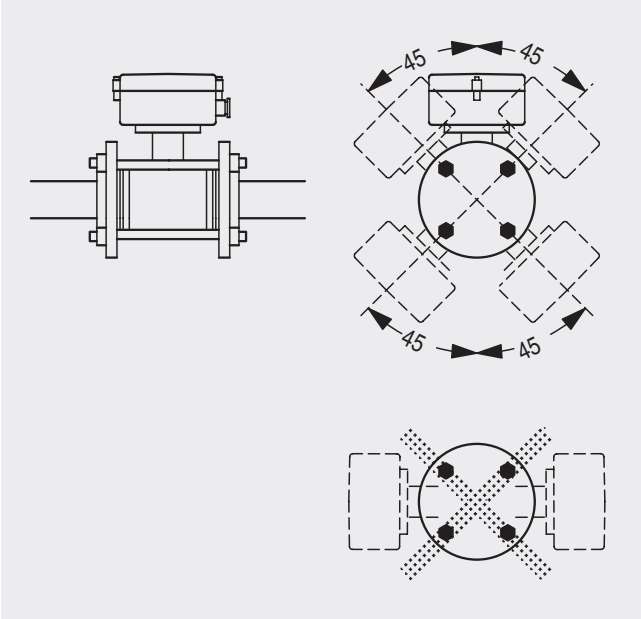

If using empty pipe detection, the sensor can be tilted 45°.

Measuring abrasive liquids and liquids containing particles

Recommended installation is in a vertical/inclined pipe to minimize the wear and deposits in the sensor.

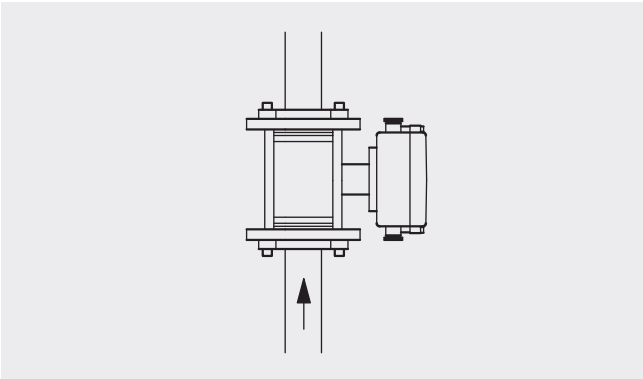

Install in vertical pipelines with upward flow direction if measuring abrasive liquids

Inlet and outlet conditions

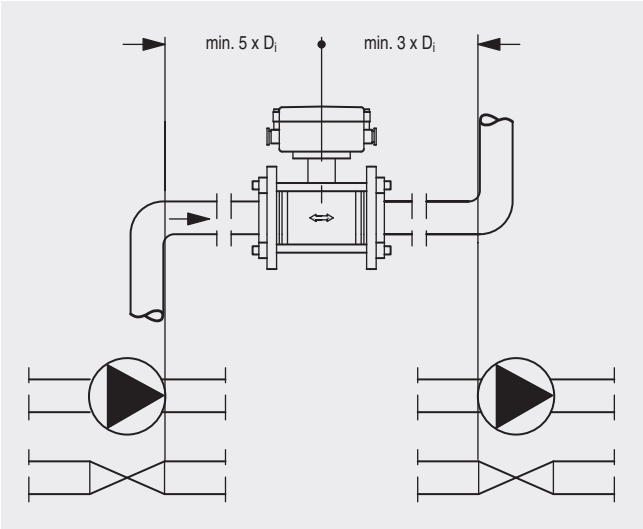

Installation between elbows, pumps and valves: standard inlet and outlet pipe sections

To achieve maximum accurate flow measurement it is essential to have straight length of inlet and outlet pipes and a certain distance between the flowmeter and pumps or valves.

It is also important to center the flowmeter in relation to pipe flange and gaskets.

Potential equalization

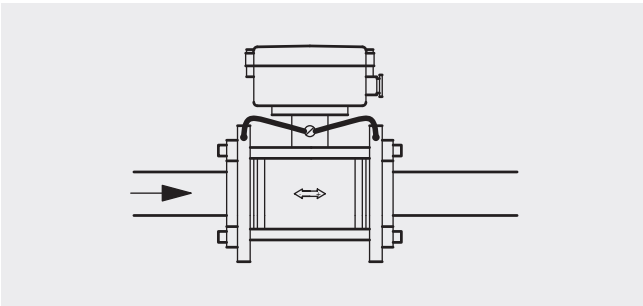

Potential equalization

The electrical potential of the liquid must always be equal to the electrical potential of the sensor. This can be achieved in different ways depending on the application:

- Wire jumper between sensor and adjacent flange (MAG 1100, MAG 3100)
- Direct metallic contact between sensor and fittings (MAG 1100 Food)
- Built-in grounding electrodes (MAG 3100, MAG 3100 W, MAG 5100 W)
- Optional grounding/protection flanges/rings (MAG 1100, MAG 3100)
- Optional graphite gaskets on MAG 1100 (standard for MAG 1100 High Temperature)

Vacuum

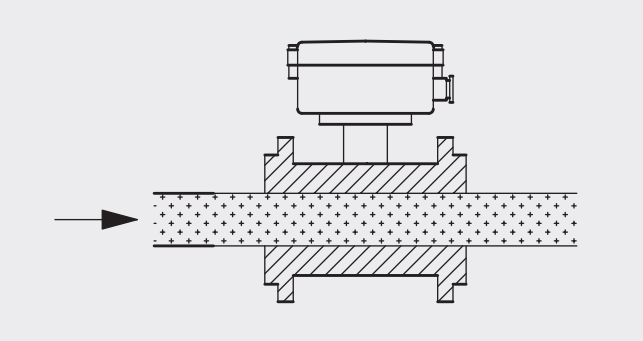

Avoid a vaccum in the measuring pipe, since this can damage certain liners.

Installation in large pipes

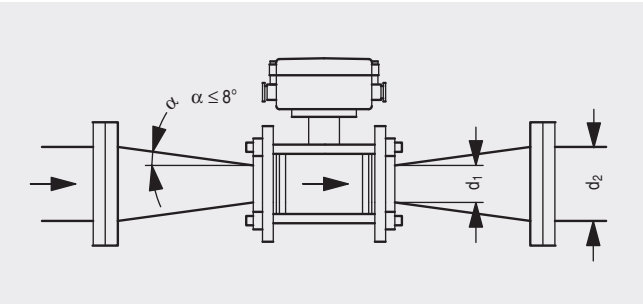

Reduction in nominal pipe diameter

The flowmeter can be installed between two reducers (e.g. DIN 28545). Assuming that at 8° the following pressure drop curve applies. The curves are applicable to water.

System information MAGFLO electromagnetic flowmeters

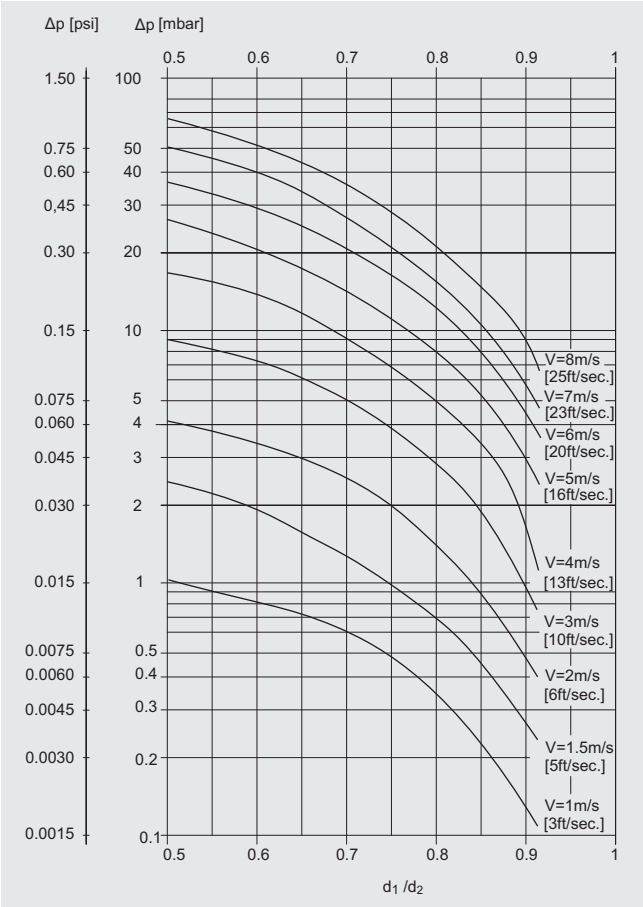

Pressure drop as function of diameter reduction between reducers

Example:

Flow velocity (v) of 3 m/s (10 ft/s) in a sensor with a diameter reduction DN 100 (4") to DN 80 (3") (d_1/d_2 = 0.8) gives a pressure drop of 2.9 mbar (0.04 psi).

Ambient temperature

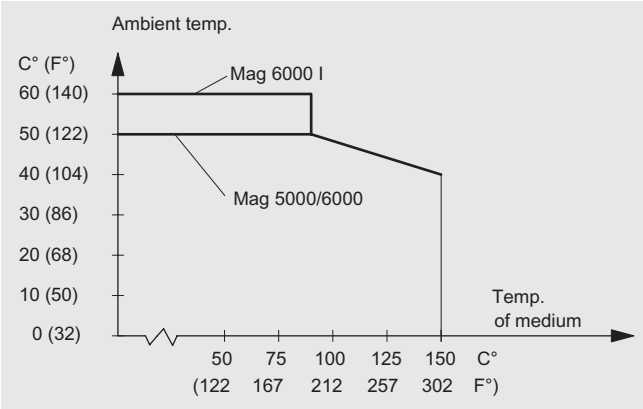

Max. ambient temperature as a function of temperature of medium

The transmitter can be installed either compact or remote.

With compact installation the temperature of medium must be according to the graph.

Sensor cables and conductivity of medium

Compact installation:

Liquids with an electrical conductivity ≥ 5 µS/cm.

Remote installation:

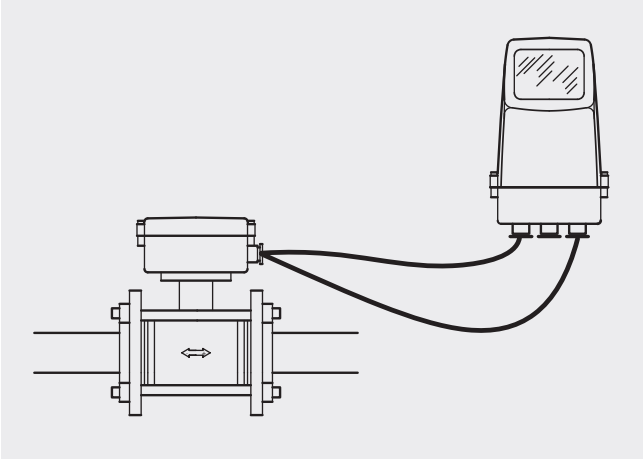

Remote installation

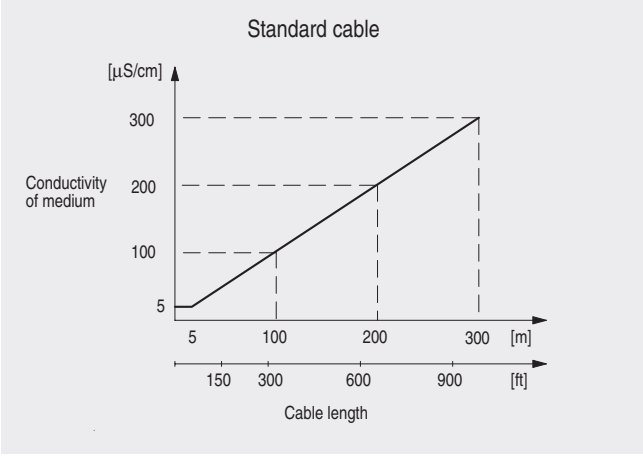

Conductivity of medium (using standard cable)

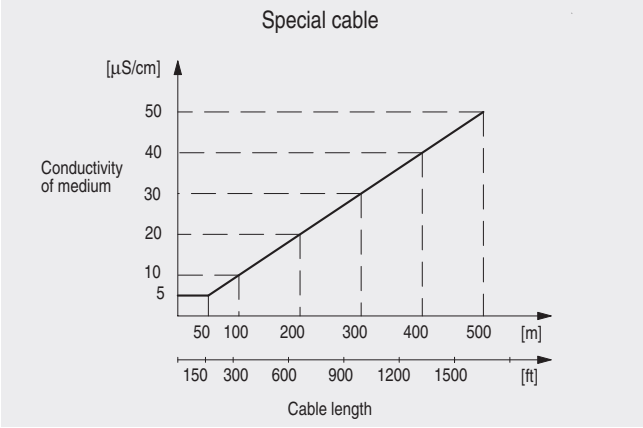

Conductivity of medium (using special cable)

Note

For detection of empty sensor the minimum sensor conductivity must always be ≥ 20 µS/cm and the maximum length of electrode cable when remotely mounted is 50 m (150 ft). Special shield cable must be used.

For remote mounting in Ex applications special cable cannot be used, empty sensor cannot be detected and the conductivity must be ≥ 30 µS/cm. For remotely mounted CT installations the maximum cable length is 200 m (600 ft).