A Comparative Environmental Life-Cycle Analysis for Removing Phosphorus from Wastewater: Biological versus Physical/Chemical Processes

Erik R. Coats*, David L. Watkins, Dan Kranenburg

ABSTRACT: Phosphorus can be removed from wastewater biologically, chemically, or through a combination of the two. In this study, we applied environmental life-cycle assessment to develop a metric with which decision-makers can compare processes. Two phosphorus-removal scenarios were contrasted—one based on a desktop-level design and one based on full-scale operational data. To achieve 0.5 mg/L effluent phosphorus (desktop design), a biological-only process would incur 5.2% less effect on global warming potential, as contrasted with a chemical-only process. At an effluent quality of 0.1 mg/L (full-scale facilities), where a biological process augmented with chemicals was contrasted with a chemical-only process, the relative gap increases to 13.2%. As chemical usage increased, the adverse environmental effect of chemical treatment only increased. The results of this study suggest that best practices would center phosphorus removal first on the biological process, with chemical processes added only as necessary. *Water Environ. Res.*, **83,** 750 (2011).

KEYWORDS: phosphorus removal, environmental life-cycle analysis.

doi:10.2175/106143011X12928814444619

Introduction

Anthropogenic activities can result in the release of nutrients into aquatic environments that lead to advanced surface water body eutrophication, which, in turn, can incur significant ecological and social damage (Pretty et al., 2003). In many cases, phosphorus is often the limiting macronutrient for excess algal growth, with threshold in-stream concentrations as low as 0.01 to 0.02 mg P/L (Heathwaite and Sharpley, 1999; Seviour et al., 2003). Although non-point-source discharges arguably contribute large nutrient loads to surface water bodies (Powers, 2007), point-source discharges, such as wastewater treatment facilities (WWTFs), receive the most attention, as a result of their relative obtrusiveness and ease with which they can be and are regulated. As a consequence, removal of phosphorus from wastewater often is viewed as the panacea in the mitigation of advanced eutrophication. In fact, for the first time, the U.S. Environmental Protection Agency (Washington, D.C.) (U.S. EPA) has implemented national nutrient criteria that, in some regions, establish in-stream phosphorus concentrations at the above-cited threshold (U.S. EPA, 2003), with the aim of reducing advanced eutrophication on a national scale.

Phosphorus can be removed from wastewater biologically or physically/chemically (using metal salts and polymers followed by filtration), or through a combination of these methods. Physical/chemical methods for removing phosphorus are considered universally applicable and reliable; however, these processes yield increased WWTF operational costs, can adversely affect effluent pH, and increase solids handling requirements (Kang et al., 2008; U.S. EPA, 2000). Conversely, biological phosphorus removal (BPR) can be a less expensive process to construct and operate, generates fewer solids, and does not rely on the process of extracting nonrenewable minerals from the earth (Kang et al., 2008; Oehmen et al., 2007). Further, the solids generated in BPR can be used agronomically; a recent study has shown that the use of BPR sludge as fertilizer can significantly offset the demand for synthetic fertilizers (Foley et al., 2010). In contrast, chemical sludge is less appropriate for agronomic use and often must be landfilled or transported off-site for treatment (U.S. EPA, 2000). Thus, while BPR seemingly would be the preferred first choice of treatment (even if a combined system is necessary), particularly given that the process is centered on renewable processes and considering that a goal of wastewater treatment should be to reduce the environmental footprint of human activities, decision-makers nonetheless lack an environmental metric with which to compare process options. Thus, the question remains: ''Which approach for phosphorus removal truly results in less environmental impacts?''

Life-cycle analysis (LCA) is an evolving analytical tool that can be applied to develop a metric with which to compare, contrast, and evaluate processes, products, etc., with regards to their potential environmental effects from cradle to grave (Hauschild, 2005). Typical environmental effects that can be assessed using LCA include eutrophication, global warming, human health, and air acidification. At its core, an LCA is a graded model, with inputs of energy and raw materials and outputs of waste or emissions. Potential environmental effects are assessed to each emission associated with the inputs and outputs. With appropriate weighting scales, processes, products, and so on can be quantitatively compared as a whole from an environmental perspective. When applied comparatively, LCA can be used to analyze the differences in environmental effect between multiple processes that accomplish the same task or function. The inherent

Department of Civil Engineering, University of Idaho, Moscow, Idaho.

* Department of Civil Engineering, University of Idaho, BEL 129, Moscow, ID 83844-1022; e-mail: ecoats@uidaho.edu.

value of this modeling process and associated outputs lies in the ability to make more educated and informed decisions with regard to broad environmental effect when considering alternative processes or products.

With regard to water supply and wastewater management systems, LCA has been recognized as a valuable tool that can be applied to compare treatment practices and technical solutions (Lundin et al., 2000). Considering, broadly, the concept of no treatment versus advanced treatment, although wastewater treatment facilities are not necessarily environmentally benign (e.g., facilities indirectly produce carbon dioxide [CO_2] associated with energy demand, methane via anaerobic digestion, and nitrogen and phosphorus in reclaimed water), LCA research has shown that the net environmental benefits of formal treatment can be significant (Lassaux et al., 2007). However, the sustainable level of treatment has been debated. For example, Lassaux et al. (2007) suggest that maximum treatment should be accomplished, while Lundie et al. (2004) concluded that, for incremental improvements in treatment process efficiency, commensurate, broad environmental benefits will not necessarily be realized. Lundie et al. (2004) determined that eutrophication potential (associated with the discharge of nitrogen and phosphorus to surface waters) could be reduced through enhanced nutrient removal, yet the benefits would be negatively offset with increased energy demand. Similarly, Foley et al. (2010) suggests that, considering broad environmental effects versus local improvements in water quality, perhaps ''optimal'' treatment would not be associated with maximum nutrient removal. While the debate on the appropriate level of treatment should continue, in the meantime, WWTF owners/managers face the reality of increasingly stringent water quality regulations. In this regard, comparative guidance is needed in selecting treatment processes.

The purpose of the research presented and discussed herein was to advance a comparative LCA for phosphorus removal from municipal wastewater. Two LCAs were developed; scenario #1 directly contrasted biological versus physical/chemical phosphorus removal, while scenario #2 contrasted a combined BPR–physical/chemical process versus a physical/chemical phosphorus-removal-only process.

Specific objectives of this comparative LCA were as follows:

(1) Quantify emissions from the respective processes that potentially could incur an effect on the environment,
(2) Correlate the respective emissions to specific environmental effects,
(3) Compare the processes using LCA metrics for each respective environmental effect, and
(4) Identify variables and alternatives wherein treatment process efficiencies can be realized to improve each LCA effect category.

The ultimate goal of this study was to develop an analysis and set of criteria that could be used as a tool or guideline to assist decision-makers (engineers, owners, regulators, etc.) in considering environment effects when designing phosphorus-removal capabilities in treatment plants, and to assist researchers seeking to modify current technologies or pioneer new phosphorus-removal technologies, while considering environmental effects.

Table 1—Typical composition of untreated medium-strength domestic wastewater (Tchobanoglous et al., 2003).

Constituent	Unit	Wastewater Concentrations
Solids, total (TS)	mg/L	720
Dissolved, total (TDS)	mg/L	500
Fixed	mg/L	300
Volatile	mg/L	200
Suspended solids, total (TSS)	mg/L	210
Fixed	mg/L	50
Volatile	mg/L	160
Settleble solids	mg/L	10
Boichemical oxygen demand 5-d, 20°C (BOD_5, 20°C)	mg/L	290
Total organic carbon (TOC)	mg/L	140
Chemical oxygen demand (COD)	mg/L	430
Nitrogen (total as N)	mg/L	40
Organic	mg/L	15
Free ammonia	mg/L	25
Nitrites	mg/L	0
Nitrates	mg/L	0
Phosphorous (total as P)	mg/L	7
Organic	mg/L	2
Inorganic	mg/L	5
Chlorides	mg/L	50
Sulfate	mg/L	30
Oil and Grease	mg/L	90
Volatile organic compounds (VOCs)	mg/L	100–400

Methodology

Functional Unit. The functional unit provides a reference to time and the level of process performance (International Organization for Standardization, 1997); a comparative LCA requires the same functional unit. For both LCA scenarios, the functional unit selected was the production of 37 854 m^3 (10 mil gal) of treated effluent meeting minimum prescribed water quality criteria (described separately below for each scenario considered).

Description of Wastewater Treatment Systems—Life-Cycle Analysis Scenario #1. This scenario was centered on the concept that a treatment plant achieving biological nutrient removal (BNR) (specifically the modified Ludzack Ettinger [MLE] process [Metcalf & Eddy, 2003], which will remove organic carbon and nitrogen) would be upgraded to achieve phosphorus removal. Scenarios #1A and #1B are each theoretical treatment systems, designed at a desktop level using the BioWin simulation package (EnviroSim Associates, Hamilton, Ontario, Canada) to treat medium-strength domestic wastewater (Table 1 [Metcalf & Eddy, 2003]) to the prescribed effluent water quality. This scenario was assessed to specifically determine relative LCA differences between biological-only and physical/chemical-only phosphorus removal. Target effluent quality criteria used for process design were a total nitrogen limit of 10 mg N/L and a total phosphorus limit of 0.50 mg P/L.

Scenario #1A—Physical/Chemical Phosphorus Removal. This treatment scenario (Figure 1a) would add chemical (aluminum sulfate [alum]) coagulation and depth sand filtration to

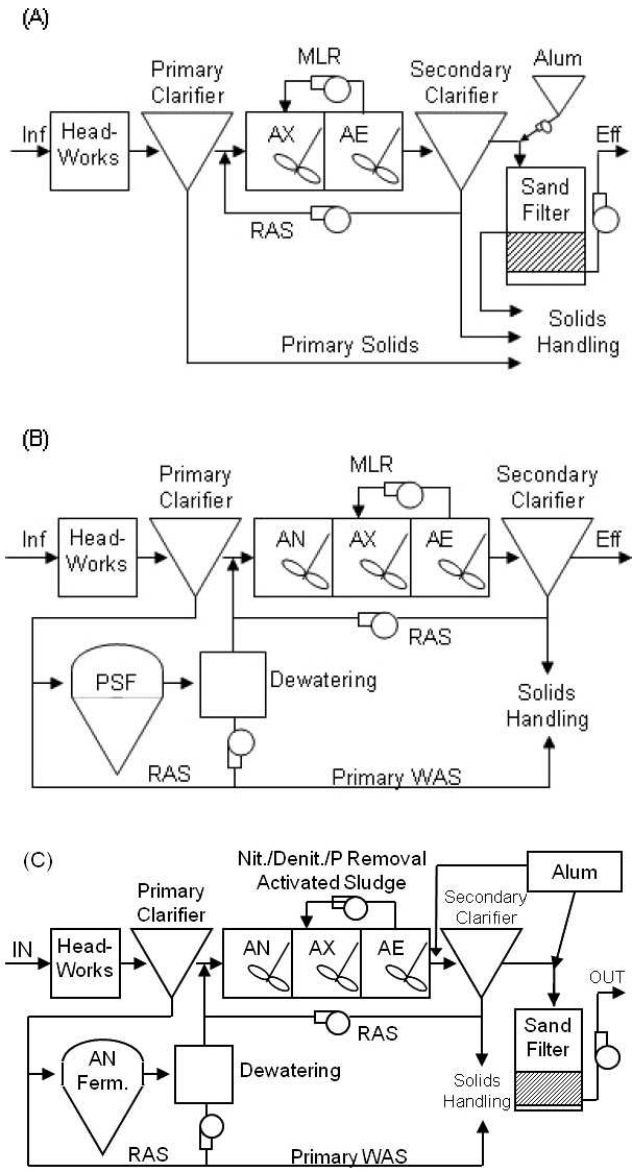

Figure 1—Schematic diagrams of the respective wastewater treatment facilities considered in this environmental LCA (AN = anaerobic bioreactor, AX = anoxic bioreactor, AE = aerobic bioreactor, AN Ferm = anaerobic fermenter, nit = nitrification, denit = denitrification, P = phosphorus, and alum = aluminum sulfate [coagulant]): (a) scenario 1A and 2A, (b) scenario 1B, and (c) scenario 2B.

the BNR process to accomplish phosphorus removal. Raw wastewater first would be processed through a headworks, wherein inorganic matter would be removed via screening and grit removal; settleable solids would be removed in a primary clarifier, with raw wastewater overflowing into the BNR system, while collected solids would be pumped to a sludge handling system. Organic carbon and nitrogen would be removed biologically in the MLE system, which centers on aerobic oxidation of organic carbon and ammonia-nitrogen; the nitrate-rich wastewater would be recycled upstream to the anoxic basin to be reduced microbially to nitrogen gas. Biomass from the MLE system would be separated from the reclaimed water in a secondary clarifier. The core BNR system was estimated to produce an effluent containing 1.18 mg P/L. Alum would be mixed rapidly (coagulated) with the reclaimed water to remove residual phosphorus (to 0.5 mg P/L) from solution, and the phosphorus-rich flocs would be removed via sand filtration. Alum dosing was estimated empirically at 1.59 moles Al:mole P (Metcalf & Eddy, 2003); the daily alum demand was estimated at 764 kg (1684 lb), with the chemical applied as a 48% solution (w/v). Chemical sludge from the filtration system would be dewatered for landfill disposal. The chemical phosphorus-removal system components included an alum tank with dispensing controls, a rapid mixing system, a filter tower with sand filtration media, and backwash pumps. Coagulated effluent would be discharged to a sand filter for phosphorous removal. The filter system would be hydraulically loaded at 160 L/min·m^2 (3.9 gpm/sq ft).

Scenario #1B—Biological Phosphorus Removal. This treatment scenario (Figure 1b) was based on a conventional BPR process (specifically the A^2/O process [Metcalf & Eddy, 2003]), which uses microorganisms to remove organic carbon, nitrogen, and phosphorus. The selected BPR process is effectively the base MLE system with an anaerobic basin added at the upstream end. A primary solids fermenter (PSF), with associated pumping and mixing, was integrated to the BPR process to generate the requisite volatile fatty acids (VFAs) necessary to drive BPR (Grady Jr. et al., 1999). The VFA-rich supernatant would be eluted into the BPR system, while sludge would be pumped to the solids handling and treatment system.

Description of Wastewater Treatment Systems— Life-Cycle Analysis Scenario #2. The two treatment systems analyzed under scenario #2 are full-scale operating treatment facilities, one using BPR with chemical addition/filtration to further remove phosphorus (identified as facility RC; median total phosphorus permit limit of 0.11 mg/L), and the second being a BNR plant that uses physical/chemical phosphorus removal only (identified as facility DM; median phosphorus permit limit of 0.10 mg/L). Both WWTFs are owned and operated by Clean Water Services (CWS), which is a water resources management utility located in Washington County, Oregon (within the Portland, Oregon, metropolitan area). Beyond the nutrient-removal processes, each WWTF is operated largely the same; thus, only the nutrient-removal processes were considered in this study.

Scenario #2A (Facility RC)—Biological Nutrient Removal plus Physical/Chemical Phosphorus Removal. In this WWTF (similar in concept to scenario #1A; see Figure 1a), wastewater is screened and discharged to primary clarifiers. Biological nutrient removal occurs in a MLE-configured activated sludge system, followed by secondary clarification. Alum is mixed rapidly with secondary treated effluent, followed by flocculation and tertiary clarification. The tertiary effluent is treated via sand filtration, disinfected, and discharged.

Scenario #2B (Facility DM)—Biological Phosphorus Removal Enhanced with Physical/Chemical Phosphorus Removal. At this WWTF (see schematic diagram in Figure 1c), wastewater is screened, degritted, and then discharged to primary clarifiers. Enhanced biological phosphorus removal (EBPR) occurs in an A^2/O-configured activated sludge system, followed by secondary clarification. Organic acid-rich wastewater, derived from a primary solids fermenter system, is introduced in the anaerobic

Table 2—Comprehensive Life Cycle Inventory for respective phosphorus removal systems. Inventory of emissions associated with the treatment of 37,854 m^3 (10 million gallons) of wastewater, reported as mass of emission (kg) for ease of use with Life Cycle Impact Assessment. The Life Cycle Inventory is a summation of the emissions leaving the LCA boundary for each treatment system.

		Scenario #1 (kg per 37,854 m^3 of treated wastewater)		Scenario #2 (kg per 37,854 m^3 of treated wastewater)	
Activity	**Emission**	**#1A-Chemical**	**#1B-BPR**	**#2A-Chemical**	**#2B-BPR+Chemical**
Energy (Total)	NO_X	5.18	6.02	5.91	6.17
	SO_2	4.04	4.69	4.61	4.81
	CO_2	2,940.84	3,414.15	3,350.92	3,502.30
Common BNR System	NO_X	4.35	4.26	–	
	SO_2	3.39	3.32		
	CO_2	2,469.46	2,415.39		
Chemical Process Only	NO_X	0.83	–		
	SO_2	0.65	–		
	CO_2	471.38	–		
BPR Process (AN+PSF)	NO_X	–	1.76		
	SO_2	–	1.37		
	CO_2	–	998.76		
Alum Used	kg	765	–	2,513	1,456
Bauxite Mining	CO_2	15	–	49	29
Alum Production	CO_2	78.0	–	255	147
	SO_X	0.07	–	0.22	0.13
	NO_X	0.11	–	0.37	0.21
	CO	0.06	–	0.20	0.12
Alum Transport to WWTF	CO_2	519.1	–	1,703.7	986.6
Chemical Sludge Transport	sludge (wet)	1,346	–	N/A	N/A
	CO_2	16	–	N/A	N/A
Biosolids Transport	dry weight, kg	4,978	4,216	5,725	4,456
	CO_2	230	195	264	206
Effluent Nutrients	P	19.0	18.2	4.3	5.2
	Total N	326	378	589	444
	NH_3	49.2	90.8	7.4	3.5
TOTALS	NO_X	5.29	6.02	6.28	6.38
	SO_X	0.07	0.00	0.22	0.13
	SO_2	4.04	4.69	4.61	4.81
	CO_2	3,798.94	3,609.15	5,622.62	4,870.9
	CO	0.06	0.00	0.20	0.12
	P	19.0	18.2	4.3	5.2
	N	230.05	247.5	–	–
	NH_3	59.8	110.5	7.4	3.5

basin of the EBPR system to enhance the process. Secondary treated effluent is mixed rapidly with alum, followed by flocculation and tertiary clarification. The tertiary effluent is treated via sand filtration, disinfected, and discharged. Alum also is added to the grit basin effluent and to the activated sludge effluent to enhance phosphorus removal.

System Boundary and Scope Definition. The system boundary for both scenarios included all secondary and tertiary liquid stream processes within each respective treatment scenario, including the PSF for the BPR systems. Each system boundary also included elements associated with alum production (from mining through processing) and transportation, chemical sludge transportation, and energy production.

Geographical Location. The methods of power generation vary across regions in the United States (e.g., wind, coal, nuclear, and hydroelectric); thus, to incorporate environmental effects associated with energy generation, the LCA needed to be based on a specific region. For this LCA, all scenarios were assumed to be located in the Pacific Northwest region of the United States (the WWTFs in scenario #2 are located in this region). As such, 48.6% of the power was assumed to be provided by hydropower, 10.8% by natural gas, 34.4% from coal, 3.3% nuclear, and 2.3% non-hydropower renewable, and 0.6% other (e.g., oil) (U.S. EPA, 2009).

Life-Cycle Impact Assessment. The U.S. EPA's Tool for the Reduction and Assessment of Chemical and other Environmental Impacts (TRACI) (Bare et al., 2002) was used to quantify the respective environmental life-cycle impacts associated with emissions from the two phosphorus-removal technologies. The TRACI was selected for this LCA study, because of its consistency with United States environmental policies and regulations (Bare and Gloria, 2006), which inherently guide wastewater treatment practices in this country. For this study, environmental impact categories included global warming (air), eutrophication (water), eutrophication (air), human health non-cancer (water), human health criteria (air), smog (air), and acidification (air). Total emission quantities from the respective treatment processes (Table 2) were organized into these impact categories, and, using TRACI, potential impacts to the environ-

Table 3—Life Cycle Impact Assessment, based on the TRACI model (Bare et al., 2002), for the respective treatment scenarios investigated. Impact values are the result of the Life Cycle Inventory elements being organized into the designated categories and multiplied by appropriate impact factors. The units are unique for each inventory item and impact category (units as shown); commonly the units are as equivalent to a reference chemical (i.e., CO_2-e, carbon dioxide equivalence for Global Warming).

	Scenario #1 (kg per 37,854 m^3 of treated wastewater)		Scenario #2 (kg per 37,854 m^3 of treated wastewater)	
Category	**#1A-Chemical**	**#1B-BPR**	**#2A (RC)-Chemical**	**#2B (DM)-BPR+Chemical**
Global Warming Air (CO_2-e)	3,798	3,609	5,622	4,871
Eutrophication Water (N-e)	460.8.1	505.5	612.5	476
Due to nitrogen	321.6	372.9	581	438
Due to phosphorus	138.2	132.6	31.5	38
Acidification Air (H^+ moles-e)	420.8	479.4	470.5	491.7
Smog Air (g NO_X/m)	6.6	7.5	7.3	7.7
Eutrophication Air (N-e)	0.23	0.27	0.26	0.27
HH Criteria Air (milli-DALYs)	0.06	0.07	0.06	0.07
HH Noncancer Water (toluene-e)	3.5	6.5	0.26	0.21

ment were quantified (Table 3). For each environmental impact category, the TRACI model normalizes all emissions to a single impact indicator. For example, the category indicator for the human health non-cancer category is the chemical toluene; thus, contaminants or emissions that could affect this category are each multiplied by a unique characterization factor (inherent with TRACI) to normalize on toluene-e (i.e., toluene equivalence). Individual emissions were not fractionated into different impact categories, but were applied, in full, to each applicable category. For example, NO_X emissions were applied, in full, to all three affected categories (eutrophication air, smog air, and acidification air) rather than dividing the emissions and applying only a portion of the total to each category. This approach is consistent with ISO 14042 (Curran, 2006; International Organization for Standardization, 2000). Finally, with regards to quantifying and assessing potential environmental impacts, TRACI has been developed to characterize at the mid-point level on the cause-and-effect pathway for contaminant (Bare and Gloria, 2006).

Data Quality and Simplifications. For scenario #1, influent flowrates and wastewater characteristics were not subject to temporal variability (i.e., a static LCA analysis). For scenario #2, the two WWTFs analyzed both lie in the same service area and thus were assumed to be treating comparable wastewater; the LCA analyses were based on total process emissions for the discharge period associated with the phosphorus-removal requirements (May 1 to October 31, 2009).

The biological wastewater treatment processes in scenario #1 were designed and modeled using the computer software BioWinTM version 3 simulation software (EnviroSim Associates), with the model defaults. While the core BNR process was effectively identical in scenario #1, the recycle ratio (i.e., return activated sludge [RAS]) for the BPR process required some additional optimization to induce prerequisite phosphorus-removal metabolisms in the anaerobic reactor (Seviour et al., 2003). As a consequence of this process modification (RAS ratio higher in the BPR process; Table 4), effluent nitrogen concentrations were slightly higher in scenario #1B (but still within permit

Table 4—Design details and treatment performance for the secondary and tertiary treatment process components associated with scenarios #1 and #2. Note that the effluent phosphorus, total nitrogen, and ammonia-nitrogen concentrations for scenario #1 were based on the results from the Biowin simulation software (EnviroSim Associates), while those for scenario #2 were actual averages over the period 5/1-10/31/2009.

	Scenario #1 (treating 37,854 m^3 of wastewater)		Scenario #2 (treating 37,854 m^3 of wastewater)	
Element	**#1A-Chemical**	**#1B-BPR**	**#2A-Chemical**	**#2B-BPR+Chemical**
Effluent Phosphorus (mg L^{-1})	0.50	0.50	0.114	0.138
Effluent Ammonia-nitrogen (mg L^{-1})	1.3	2.4	0.16	0.076
Effluent Total Nitrogen (mg L^{-1})	8.6	10.0	15.6	11.7
Anaerobic Basin (AN) Volume, m^3 (10^6 gal)	–	4,542 (1.2)	–	1,500 (0.40)
Anoxic Basin (AX) Volume, m^3 (10^6 gal)	3,785 (1)	3,785 (1)	3,280 (0.866)	2,370 (0.63)
Aerobic Basin (AE) Volume, m^3 (10^6 gal)	7,570 (2)	7,570 (2)	11,129 (2.94)	10,726 (2.83)
Mixed Liquor Return (MLR) Ratio	3.0	3.0	1.0	1.0
Recycle (RAS) Ratio	0.30	0.40	0.50	0.50
AE Mixed Liquor Suspended Solids (MLSS; mg L^{-1})	3,520	3,770	3,500	3,200
Solids Residence Time (days)	13	15	8.5	9.0
Primary Solids Fermenter (PSF) Volume, m^3 (10^6 gal)	–	1,514 (0.4)	–	780 (0.206)
Total Sand Filter Surface Area, m^2 (ft^2)	164.6 (1,772)	–	400 (4,300)	487 (5,240)

Table 5—Emission data for aluminum sulfate production, including bauxite mining and refining, and aluminum sulfate transport. For transportation, the following assumptions were made: i) bauxite transported 6,000 miles by ship at 0.0887 lb CO_2/mile; and ii) aluminum sulfate (alum) transported 3,000 miles by train (0.3725 lb CO_2/mile) and 500 miles by truck (0.2306 lb CO_2/mile). Emissions for chemical sludge and biosolids disposal are also shown (100 mile by truck (round trip) at 0.2306 lb CO_2/mile). For the purpose of this study, it was assumed that the biosolids were reduced in volume by 38% via anaerobic digestion, then dewatered to 25% (weight basis) prior to transport to land application.

Activity	Emission	Category	Mass of Emissions per Mass of Product
Mining Bauxite (as Al)	CO_2	Global Warming	0.085 kg/kg
Refining Ore (as Al)	CO_2	Global Warming	1.251 kg/kg
	SO_X	Acidification Air	0.00109 kg/kg
	NO_X	Smog	0.00180 kg/kg
	CO	Smog	0.00100 kg/kg
Transportation (bauxite)	CO_2	Global Warming	0.2661 kg/kg
Transportation (alum)	CO_2	Global Warming	0.616 kg/kg
Transportation (chemical sludge & biosolids)	CO_2	Global Warming	0.012 kg/kg

compliance). For both scenarios, biogenic process emissions from the activated sludge processes (i.e., CO_2 associated with microbial activity in the treatment reactors) were excluded from the analyses, because they belong to the short CO_2 cycle and do not contribute to climatic change (Eggleston et al., 2006; Hospido et al., 2008). Methane emissions similarly were considered biogenic (Eggleston et al., 2006), as it was assumed that any such emissions from a given process (e.g., the PSF) either would be flared or used to generate energy. For biosolids disposal, it was assumed that the biosolids slurry was dewatered to 25% (w/w).

For the scenario #1 comparison, certain elements and processes within each treatment process were effectively identical and thus were not included in the LCA analyses. Specific elements excluded from the analyses were the return and waste activated sludge (RAS and WAS, respectively) pumping associated; mixed-liquor return (MLR) pumping; headworks operation (i.e., mechanical screening and grit removal); primary solids pumping (same pump would deliver primary solids to either the biosolids treatment system [scenario #1A] or to the primary solids fermenter [scenario #1B]); and biological sludge (primary solids and WAS) handling and treatment (assumed to be managed in the same manner, except chemical sludge from scenario #1, which will be incorporated to the LCA). For scenario #2, the RAS and WAS pumping was excluded simply because the systems were effectively identical.

Assessment and emissions quantifications associated with the production, use, and disposal of alum and related byproducts were assembled from several sources (Table 5). The mining of bauxite was assumed to occur in South America, with Brazil being a leading producer of aluminum ore in the world (Energetics, Inc., 1997). The bauxite ore then was transported via ship to an aluminum sulfate production facility located on the east coast of the United States (approximately 9654 km [6000 miles] one-way). Dry aluminum sulfate was assumed then to be transported by rail to the west coast (4827 km [3000 miles] one-way), and then by truck to the WWTF (approximately 805 km [500 miles] one-way). The chemically-rich waste solids would be trucked to a landfill for disposal (approximately 161 km [100 miles] round-trip).

Life-Cycle Inventory Results

The life-cycle inventory (LCI) analysis is a necessary first step in the LCA process, wherein all material and energy flows that can be correlated to some form of an environmental impact are defined and quantified into, through, and out of the system boundary. Ultimately, these material and energy flows are sorted into appropriate categories, such that environmental impacts can be quantified. For this study, the LCI was developed in accordance with ISO 14041 standards (International Organization for Standardization, 1998).

Before discussing the specifics of the LCI, some context is necessary. The principal purpose of the wastewater treatment processes being compared in this LCA is the continuous (24 hours per day, 7 days per week, 365 days per year) removal of contaminants from, and recovery of, a natural resource (water). Thus, LCA inputs and outputs of interest were centered on energy demands and surface water/atmospheric emissions associated with secondary and tertiary treatment process operations and the production of chemical inputs. Preliminary and primary treatment operations were assumed to be identical within each contrast for both scenarios. Potential impacts associated with infrastructure and capital construction also were not included in the analyses; these elements would incur a one-time environmental impact and, relative to total environmental emissions, would be dwarfed by the operation of these facilities (which exhibit a long lifespan [25 to 50+ years]). Similar assumptions were made in comparing wastewater biosolids management systems (Peters and Rowley, 2009); comparing municipal wastewater biogas management and sludge application systems (Pasqualino et al., 2009); comparing four full-scale municipal wastewater treatment plants (Hospido et al., 2008); and developing guidance criteria for planning metropolitan water systems (Lundie et al., 2004).

The material and energy flows, with the respective data sources, considered in this LCA are summarized in Table 6. The energy-consuming processes for the biological- and chemical-removal systems are presented in Table 7, with the estimated quantities. Emissions quantified in this study, which could induce adverse environmental impacts, included nitrous oxide (NO_X), sulfur oxide (SO_X), sulfur dioxide (SO_2), CO_2, carbon monoxide (CO), total phosphorus (P), nitrate/nitrite as nitrogen (N), and ammonia (NH_3); quantities were calculated as kilograms emitted and are inventoried in Table 2. Additional LCI details for each treatment scenario are described in more detail below; inventory details on the treatment process common to scenario #1—that is, the BNR element—are first discussed.

Table 6—Data sources for the Life Cycle Inventory.

Life Cycle Inventory Item		Source of Data
Energy Consumption	Anaerobic Mixing	Scenario #1: Quantity derived from BioWin (EnviroSim Associates), based on power for required velocity gradient. Scenario #2: Based on actual system.
	Anoxic Mixing	Scenario #1: Quantity derived from BioWin (EnviroSim Associates), based on power for required velocity gradient. Scenario #2: Based on actual system.
	Aerobic Blowers	Scenario #1: Quantity derived from BioWin (EnviroSim Associates), based on targeted dissolved oxygen concentration. Scenario #2: Based on actual system.
	PSF Mixing	Scenario #1: Design equations for a pitched blade turbine mixer (Tchobanoglous et al., 2003). Scenario #2: Based on actual system.
	PSF Pumping	Scenario #1: Thickened solids pumping power equations (Sanks, 1989). Scenario #2: Based on actual system.
Aluminum Sulfate	Required Dosage	Scenario #1: Metcalf & Eddy (Tchobanoglous et al., 2003). Scenario #2: Based on actual system.
Gas Emissions	Energy Production	Northwest Public Power Association
	Alum Production	(Energetics, 1997; Van Zyl, 2006)
	Alum, Sludge, and Biosolids Transport	(CarbonFund.org, 2009)
Soluble Effluent Contaminants	Total Phosphorus	Scenario #1: Effluent concentrations based on results from BioWin biological treatment system model (EnviroSim Associates). Scenario #2: Based on actual system.
	Total Nitrogen	Scenario #1: Effluent concentrations based on results from BioWin biological treatment system model (EnviroSim Associates). Scenario #2: Based on actual system.

Scenario #1 Common Treatment System—Biological Nutrient Removal. Emissions from the BNR configuration in scenario #1 are associated principally with the energy required for aeration and mixing. The aerobic basin must be aerated continuously to facilitate oxidation of organic carbon and ammonia-nitrogen, while the anoxic basin must be mixed continuously to ensure nitrate reduction. While N_2O is a greenhouse gas that can be emitted from WWTFs (Kampschreur et al., 2009), emissions were excluded from these analyses, because both alternatives would emit the same quantity. Air and water emissions for this process were determined using the BioWin (version 3) simulation model (EnviroSim Associates). Finally, the BNR system is principally responsible for the removal of nitrogen, although, as shown in Table 4, the chemical treatment system does achieve some nominal additional nitrogen removal.

Scenario #1A—Physical/Chemical Phosphorus Removal. The chemical phosphorous-removal system was centered on the addition of aluminum sulfate (alum), which will react with soluble phosphorus to form an insoluble solid that then can be removed physically as chemical sludge. Thus, one emission unique to this treatment process is the chemical-rich sludge. Alum production and processing emissions (Tables 2 and 5) included those associated with raw material extraction and transport, alum manufacturing, transportation to the point of use, and chemical sludge disposal (alum-coagulated solids). Despite an extensive search, process-specific emissions for the conversion of bauxite ore to aluminum sulfate could not be located in the literature; thus, emissions associated with the production of alumina were used as a surrogate (Energetics, Inc., 1997; Van Zyl, 2006). It was assumed that bauxite ore was transported approximately 9654 km (6000 miles) by ship and converted to alum; the alum was

Table 7—Energy consumption of principal secondary and tertiary treatment process components associated with the treatment of 37,854 m^3 (10 million gallons) of wastewater.

	Scenario #1 (MW-h per 37,854 m^3 of treated wastewater)		Scenario #2 (MW-h per 37,854 m^3 of treated wastewater)	
Treatment Process Component	#1A-Chemical	#1B-BPR	#2A-Chemical	#2B-BPR+Chemical
Anaerobic (AN) Mixing	–	0.55	–	0.04
Anoxic (AX) Mixing	0.46	0.46	0.03	0.04
Aerobic (AE) aeration	5.58	5.46	8.1	8.2
Primary Solids Fermenter (PSF) Recycle Pumping	–	0.05	–	0.12
PSF Mixing	–	1.85	–	0.04
Rapid (alum) Mixing	0.27	N/A	0.06	0.12
Sand Filter Pumping	0.72	N/A	–	–
Total	7.19	8.35	8.19	8.56

transported approximately 4827 km (3000 miles) by rail and 805 km (500 miles) by truck to the WWTF. For this scenario, the chemical solids byproduct from the WWTF would be shipped approximately 161 km (100 miles) to be disposed in a landfill. Emissions generated during each transportation leg were based on an online shipping calculator (CarbonFund.org, 2009).

Scenario #1B—Biological Phosphorus Removal. As shown in Table 2, energy generation for the PSF and anaerobic bioreactor mixing contribute measurable quantities to the air emissions. The PSF and anaerobic bioreactors are unique to BPR and are required specifically to facilitate or promote microbial growth/functions necessary for successful BPR (Grady Jr. et al., 1999). The energy required to mix the PSF is higher than for the anaerobic reactor (Table 7), as a result of the contents of the PSF being thickened primary solids (3.2% [w/w]), as contrasted with suspended biomass in the anaerobic basin (approximately 0.36%). Finally, it should be noted that the BPR system produces a slightly larger quantity of effluent ammonia (approximately 2×) compared with the chemical treatment system (Table 2). Integration of the anaerobic bioreactor upstream of the BNR process results in more complex microbiology and associated stoichiometry and nutrient-removal kinetics that is ultimately slightly less efficient at nitrification.

Scenario #2A (Facility RC) and Scenario #2B (Facility DM). The primary difference between these two full-scale WWTFs is the integration of BPR at facility DM. As with scenario #1B, facility DM integrates a PSF and anaerobic basin. The two full-scale WWTFs commingle chemical sludge with biosolids. The combined solids stream is processed and managed (land-applied) similarly between the two facilities.

Life-Cycle Assessment Results

Scenario #1: Biological versus Physical/Chemical Phosphorus Removal. The purpose of evaluating this scenario was to independently elucidate the relative environmental effects of the two commonly used processes for removing phosphorus from wastewater. Both processes were designed using a computer model (in this case, BioWin), and produce effluent with 0.5 mg P/L. Results from the TRACI model for each of the environmental impact categories are discussed in detail below. In addition to the LCA modeling, and to further contrast the two treatment processes, the mass of solids produced daily also were contrasted.

For the two contrasted processes, the largest environmental impacts, in order of magnitude, were associated with CO_2 emissions, eutrophication-water, and acidification (Table 3). The predominant source of CO_2 is associated with energy production (Table 2; both for the treatment plant operations and, for the physical/chemical scenario, alum manufacturing) and transportation (again for alum; also for chemical sludge and biosolids transport). This observation is consistent with that of others (Hospido et al., 2008; Lundie et al., 2004). From an energy perspective, the BPR process exhibited an approximately 16% greater CO_2 footprint; however, emissions associated with alum production/transport and with sludge/biosolids transport ultimately created a deficit for the physical/chemical treatment process. Overall, considering the potential to cause global warming, the physical/chemical phosphorus-removal configuration exhibits the largest environmental impact by approximately 5.2% (Table 3).

The mass emissions of nitrogen and phosphorus (Table 2) associated with reclaimed water discharges for each treatment scenario were applied to the eutrophication-water category, which is based on the model of soluble nitrogen transport through and interaction with aquatic environments. While nitrogen is the category indicator, phosphorus is also a significant causative agent of advanced eutrophication (Heathwaite and Sharpley, 1999); the LCA characterization factor for phosphorus is approximately 7 times higher than that of nitrogen (Bare et al., 2002). Thus, although the mass of phosphorus discharged is markedly less than nitrogen, this inorganic compound can exhibit a large effect on the results in this category (Table 3). Ultimately, the biological-only process incurred an approximately 10% larger environmental footprint for this category, largely as a result of effluent nitrogen. However, it is apparent that any fluctuation in effluent phosphorus or nitrogen, for either process, would likewise incur significant changes in the indicator result for this category; thus, the advantage of the chemical treatment process cannot be interpreted as absolute.

Both treatment configurations exhibit relatively significant potential to induce mid-point effects of acidification-air (Table 3). The causative agents are NO_X and SO_2 associated with energy production, with SO_2 inducing approximately 20% more impact than NO_X. Overall, the physical/chemical treatment scenario realizes approximately 12.5% less impact, as a result of its slightly reduced treatment energy footprint.

Outside of the above-described emissions, wastewater treatment exhibits small adverse effects on air quality indirectly associated with energy production, and, in all categories, the BPR process exhibits the larger footprint (Table 3). The NOx emissions are accounted for both in the smog-air and eutrophication-air categories, with the latter based on the model of gaseous nitrogen transport through and interaction with the atmosphere. The environmental impact for these categories could be reduced for both processes with the advancement of more efficient motors and more environmentally benign power generation. The SO_2 emissions can contribute toward human toxicity (human health criteria air), and the physical/chemical system contributed marginally less to this criterion than the BPR (0.06 versus 0.07 milli-DALYs [disability-adjusted life-years]). While the overall impact of WWTF operation on these categories was quite minimal, note that, for other geographic regions, the impact would need to be reassessed based on the local energy composition, because the contributions of NOx and SO_2 were derived from carbon-based power sources; geographic locations using a greater fraction of coal and/or natural gas derived power would see greater impacts.

The only emission applicable to the human health non-cancer water category was the ammonia present in the effluent (Table 2). This category is based on the transport model of toluene through an aquatic environment, with a human body as the endpoint. The indicator result for the BPR process was almost twice as much as the physical/chemical process (Table 3), albeit very small. Recognizing that this amount of ammonia could readily be reduced through process optimization, this impact could be minimized, in practice.

Regarding solids production (WAS plus primary solids), the BPR system is more efficient by approximately 15% (Table 2). While the BPR system generates more WAS, solids production is offset in favor of BPR, because it produces approximately 43%

less primary solids, because of the PSF. Regarding WAS, while the BPR system exhibits a longer solids residence time than the BNR system (which is core to physical/chemical phosphorus removal), which would typically correlate with reduced WAS, the BPR anaerobic tank volume increases WAS by approximately 29% (i.e., more total mixed liquor in the BPR system, thus more wasted per day). The reduced solids production would reduce the energy demand and environmental footprint of the downstream sludge treatment and management systems. The BPR solids also will be of higher phosphorus content, thus providing more agronomic value once land-applied to crops, and reduced transportation-related emissions would be realized associated with biosolids disposal.

Chemical solids production is a category unique to the chemical phosphorus scenario. A review of the literature did not reveal a marketable end-use for these chemically laden solids beyond a limited potential for recycling. As such, these solids were treated as a waste stream, and the emissions associated with transporting them to a disposal site were included in the LCI (Tables 2 and 3). Relatively speaking, this waste stream significantly increased the quantity of solids that a given facility must manage, and also significantly increased CO_2 emissions. Further, over an extended time period, the disposal of this sludge would exhibit both a significant land-use impact and also adverse emissions associated with landfill construction and operation.

Scenario #2: Physical/Chemical-Only versus Biological Phosphorus Removal-Physical/Chemical Phosphorus Removal. Wastewater discharge permits are, in some regions of the United States, trending to levels below 0.5 mg/L. When wastewater must be treated to produce effluent quality less than 0.5 mg/L phosphorus, a physical/chemical-only process similar to scenario #1A can be used (but with larger chemical doses). Alternately, the BPR process described in scenario #1B can be augmented with physical/chemical phosphorus removal. The purpose of this scenario #2 analysis was to develop an understanding of the relative environmental effects of the advanced nutrient-removal methods. The challenge in conducting a meaningful advanced assessment lies in the lack of real data and the associated sensitivities and inaccuracies inherent with developing a desktop model to treat to such low levels. Fortunately, there are two such facilities of comparable scale located in the Portland, Oregon, region, both owned and operated by CWS. Using data from CWS, the following discussion quantitatively contrasts the relative effects of the two treatment systems.

As observed with scenario #1, the largest impact associated with wastewater treatment is CO_2 emissions and the associated global warming potential (Tables 2 and 3). The BPR+chemical treatment alternative (scenario #2B) exhibits slightly more emissions associated with treatment plant operations (Table 2); however, the significantly higher alum demands required in the physical/chemical alternative (scenario #2A) ultimately cause this treatment scenario to incur a 13.4% higher impact on global warming potential. Critically, contrasted with the scenario #1 analyses, the adverse impact to the environment associated with reliance on non-biological treatment methods only increased.

Beyond global warming potential, treatment plant operations again incurred a measurable impact on the category eutrophication-water (Table 3). However, in contrast with scenario #1, the biologically dominated process (scenario #2B) incurred a significant lower impact, principally through reduced nitrogen discharged to the environment. The remaining parameters, which again are principally a result of energy consumption, were effectively the same between scenarios #1 and #2. Acidification-air, which again is the other large environmental impact associated with wastewater treatment, was comparable with that measured for scenario #1, although the gap between the biological/chemical versus chemical-only process decreased.

Life Cycle Interpretations—Conclusions and Model Sensitivities

In developed societies and in areas of high population density, advanced wastewater treatment and the associated reclamation of water is a necessary and critical function to protect both human health and the natural/aquatic environment and provide for reduced overall water demand through reuse. However, decision-makers (engineers, operators, managers, politicians, and regulators) have few tools (outside of cost) with which to make choices in treatment options and configurations. Environmental LCA, as applied herein, can provide critical metrics to help make informed decisions. In this study, we have applied environmental LCA to comparatively assess the relative effects of using chemical versus biological phosphorus-removal methods to achieve effluent phosphorus concentrations of 0.5 and 0.1 mg/L, with a principal focus on the liquid stream treatment processes.

Broadly speaking, based on the analyses presented and discussed herein, wastewater treatment, in general, can be viewed as having the most potential significant environmental impact on global warming, eutrophication (water), and acidification (air). Global warming and acidification potential impacts are associated principally with energy generation, while eutrophication is associated with nutrient emissions in the reclaimed water. Regardless of the required effluent limit, when we compare phosphorus-removal processes, based on the results presented herein, it would appear that best practices would center wastewater treatment first on the biological process, as a result of its reduced environmental impact (Table 3). The BPR process also produces significantly fewer biosolids and no chemical sludge. Biosolids treatment and processing was not included in these analyses; however, based on the research of others (Foley et al., 2010; Hospido et al., 2005; Peters and Rowley, 2009), it would be reasonable to conclude that these processes would lead to the chemical phosphorus process incurring an even larger environmental footprint. As alum usage increased to further remove phosphorus, comparatively, the adverse environmental impact of chemically dominated treatment increased. The impacts associated with alum usage for phosphorus-removal only validate that the manufacture and use of synthetic chemicals as a means to remedy wastewater phosphorus truly do generate relatively significant anthropogenic impacts at a broad geographic level (Anastas and Zimmerman, 2003). The only defense of chemical phosphorus removal would be its inherent stability. Given that BPR can be unreliable and unstable, at times (Seviour et al., 2003), integrating chemical phosphorus removal would mitigate more consistently the eutrophication-water impacts.

Model sensitivities that could affect the results presented herein are few. Scenario #1 included sand filter pumping as an electrical demand; however, a pump may not necessarily be required, as demonstrated in scenario #2 (Table 3). In addition,

the alum mixing electrical demand in scenario was much higher than the full-scale systems in scenario #2. Removing these demands would reduce the impact of the scenario #1A (physical/chemical) process and perhaps balance out comparative impacts with scenario #1B (BPR). However, similar adjustments arguably could be made for the scenario #1B process, with regard to anaerobic and PSF mixing; in fact, reductions in these demands could further validate selection of the BPR process. Finally, with regard to chemical phosphorus removal, the alum-to-phosphorus dose ratio used herein (for scenario #1A) arguably would be on the low end in full-scale application; in fact, it is not uncommon to observe the overdosing of chemicals to maintain process stability. Thus, the environmental impact data presented herein likely under-represents the real impact of such treatment systems.

As LCA becomes more integral to the selection of wastewater treatment processes, additional refinements will be required to ensure that metrics are well-grounded, with minimized variability. Regarding this study, the manufacturing of alum was the least well-defined element in the LCI; to further refine the LCA, additional LCI details are needed for the production of aluminum sulfate.

Credits

This material is based on work supported by the National Science Foundation (Arlington, Virginia) under Grant Number 0607329. Any opinions, findings, and conclusions or recommendations expressed in this material are those of the authors and do not necessarily reflect the views of the funding agency.

The authors acknowledge the significant assistance provided by Joe Danzer with Clean Water Services (Washington County, Oregon). Without his assistance in collecting the array of data requested by the authors, this study could not have been completed. The authors also acknowledge Nate Cullen with Clean Water Services for his support of this study.

Submitted for publication June 9, 2010; revised manuscript submitted November 14, 2010; accepted for publication January 10, 2011.

References

Anastas, P. T.; Zimmerman, J. B. (2003) Design through the 12 Principles of Green Engineering. *Environ Sci. Technol.*, **37,** 94A–101A.

Bare, J. C.; Gloria, T. P. (2006) Critical Analysis of the Mathematical Relationships and Comprehensiveness of Life Cycle Impact Assessment Approaches. *Environ. Sci. Technol.*, **40,** 1104–1113.

Bare, J. C.; Norris, G. A.; Pennington, D. W.; McKone, T. (2002) TRACI: The Tool for the Reduction and Assessment of Chemical and Other Environmental Impacts. *J. Ind. Ecol.*, **6,** 49–78.

CarbonFund.org (2009) Shipping Calculator. http://www.carbonfund.org/site/pages/carbon_calculators/category/Assumptions (accessed March 2009).

Curran, M. A. (2006) Life Cycle Assessment: Principles and Practice. U.S. Environmental Protection Agency: Washington, D.C.

Eggleston, H. S.; Buendia, L.; Miwa, K.; Ngara, T.; Tanabe, K. (2006) Wastewater Treatment and Discharge. Chapter 6 in *2006 IPCC Guidelines for National Greenhouse Gas Inventories,* Vol. 5; Institute for Global Environmental Strategies: Hayama, Kanagawa, Japan.

Energetics, Inc. (1997) Energy and Environmental Profile of the U.S. Aluminum Industry. BioWin version 3; EnviroSim Associates, Ltd.: Hamilton, Ontario, Canada.

Foley, J.; de Haas, D.; Hartley, K.; Lant, P. (2010) Comprehensive Life Cycle Inventories of Alternative Wastewater Treatment Systems. *Water Res.*, **44,** 1654–1666.

Grady Jr., C. P. L.; Daigger, G. T.; Lim, H. C. (1999) *Biological Wastewater Treatment,* 2nd ed.; Marcel Dekker, Inc.: New York.

Hauschild, M. Z. (2005) Assessing Environmental Impacts in a Life-Cycle Perspective. *Environ. Sci. Technol.*, **39,** 81A–88A.

Heathwaite, L.; Sharpley, A. (1999) Evaluating Measures to Control the Impact of Agricultural Phosphorus on Water Quality. *Water Sci. Technol.*, **39,** 149–155.

Hospido, A.; Moreira, M.; Feijoo, G. (2008) A Comparison of Municipal Wastewater Treatment Plants for Big Centres of Population in Galicia (Spain). *Int. J. LCA*, **13,** 57–64.

Hospido, A.; Moreira, M. T.; Martin, M.; Rigola, M.; Feijoo, G. (2005) Environmental Evaluation of Different Treatment Processes for Sludge from Urban Wastewater Treatments: Anaerobic Digestions versus Thermal Processes. *Int. J. LCA*, **10,** 336–345.

International Organization for Standardization (1998) Environmental Management—Life Cycle Assessment—Goal and Scope Definition and Inventory Analysis, ISO-14041. International Organization for Standardization: Geneva, Switzerland.

International Organization for Standardization (1997) Environmental Management—Life Cycle Assessment—Principles and Framework, ISO-14040. International Organization for Standardization: Geneva, Switzerland.

International Organization for Standardization (2000) Environmental Management—Life Cycle Assessment—Life Cycle Impact Assessment, ISO-14042. International Organization for Standardization: Geneva, Switzerland.

Kampschreur, M. J.; Temmink, H.; Kleerebezem, R.; Jetten, M. S. M.; van Loosdrecht, M. C. M. (2009) Nitrous Oxide Emission During Wastewater Treatment. *Water Res.*, **43,** 4093–4103.

Kang, S. J.; Olmstead, K.; Takacs, K; Collins, J. (2008) Municipal Nutrient Removal Technologies Reference Document. U.S. Environmental Protection Agency: Washington. D.C.

Lassaux, S.; Renzoni, R.; Germain, A. (2007) Life Cycle Assessment of Water: From the Pumping Station to the Wastewater Treatment Plant. *Int. J. LCA*, **12,** 118–126.

Lundie, S.; Peters, G. M.; Beavis, P. C. (2004) Life Cycle Assessment for Sustainable Metropolitan Water Systems Planning. *Environ. Sci. Technol.*, **38,** 3465–3473.

Lundin, M.; Bengtsson, M.; Molander, S. (2000) Life Cycle Assessment of Wastewater Systems: Influence of System Boundaries and Scale on Calculated Environmental Loads. *Environ. Sci. Technol.*, **34,** 180–186.

Metcalf & Eddy (2003) *Wastewater Engineering: Treatment and Reuse,* Tchobanoglous, G., Burton, F. L., Stensel, H. D. (Eds.); McGraw-Hill: New York.

Oehmen, A.; Lemos, P. C.; Carvalho, G.; Yuan, Z. G.; Keller, J.; Blackall, L. L.; Reis, M. A. M. (2007) Advances in Enhanced Biological Phosphorus Removal: From Micro to Macro Scale. *Water Res.*, **41,** 2271–2300.

Pasqualino, J. C.; Meneses, M.; Abella, M.; Castells, F. (2009) LCA as a Decision Support Tool for the Environmental Improvement of the Operation of a Municipal Wastewater Treatment Plant. *Environ. Sci. Technol.*, **43,** 3300–3307.

Peters, G. M.; Rowley, H. V. (2009) Environmental Comparison of Biosolids Management Systems Using Life Cycle Assessment. *Environ. Sci. Technol.*, **43,** 2674–2679.

Powers, S. E. (2007) Nutrient Loads to Surface Water from Row Crop Production. *Int. J. LCA*, **12,** 399–407.

Pretty, J. N.; Mason, C. F.; Nedwell, D. B.; Hine, R. E.; Leak, S.; Dils, R. (2003) Environmental Costs of Freshwater Eutrophication in England and Wales. *Environ. Sci. Technol.*, **37,** 201–208.

Sanks, R. L. (1989) *Pumping Station Design,* 1st ed.; Butterworths: Boston, Massachusetts.

Seviour, R. J.; Mino, T.; Onuki, M. (2003) The Microbiology of Biological Phosphorus Removal in Activated Sludge Systems. *FEMS Microbiol. Rev.*, **27,** 99–127.

U.S. Environmental Protection Agency (2003) Nutrient Criteria Development; Notice of Ecoregional Nutrient Criteria. *Federal Register*, **68** (3), January 6, 2003.

U.S. Environmental Protection Agency (2009) How Clean is the Electricity I Use?—Power Profiler. U.S. Environmental Protection Agency: Washington, D.C., http://www.epa.gov/RDEE/energy-and-you/how-clean.html (accessed March 2009).

U.S. Environmental Protection Agency (2000) Wastewater Technology Fact Sheet: Chemical Precipitation. U.S. Environmental Protection Agency: Washington, D.C.

Van Zyl, D. (2006) Life Cycle of Aluminum. Mining Life-Cycle Center, University of Nevada: Reno, Nevada.