C-clamp FEA Analysis

ME 341 students are asked to determine the stresses on the inner and outer surface of a C-clamp at a point on the curved section and the straight section of the clamp. The following details the steps necessary to compute the stresses using FEA in SolidWorks. The results are then compared to the solution found using TK Solver.

1) Create a model of the c-clamp in SolidWorks.

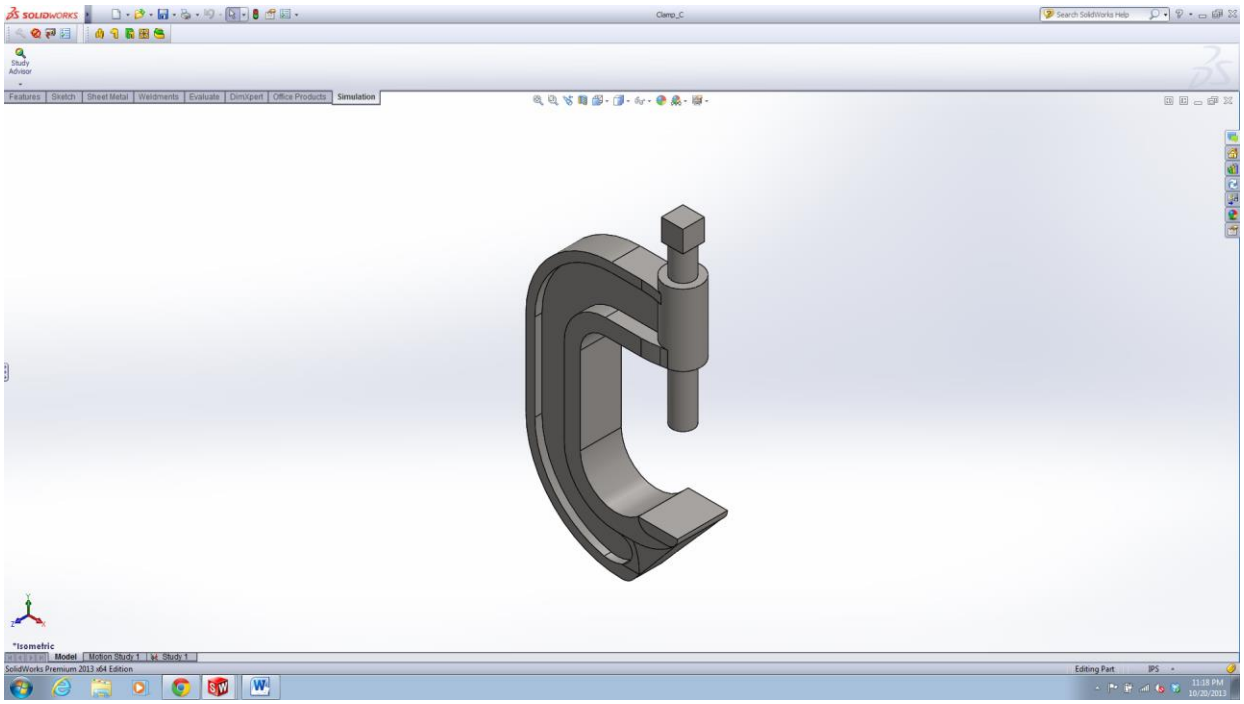

2) Open the SolidWorks Simulation toolbar. Select the dropdown under the Study Advisor button and select the New Study option.

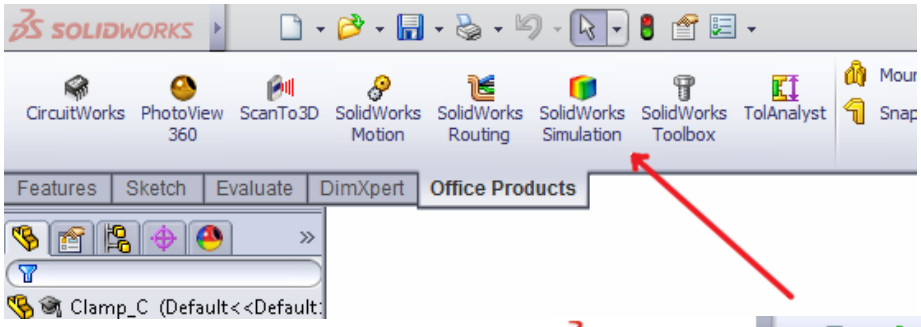

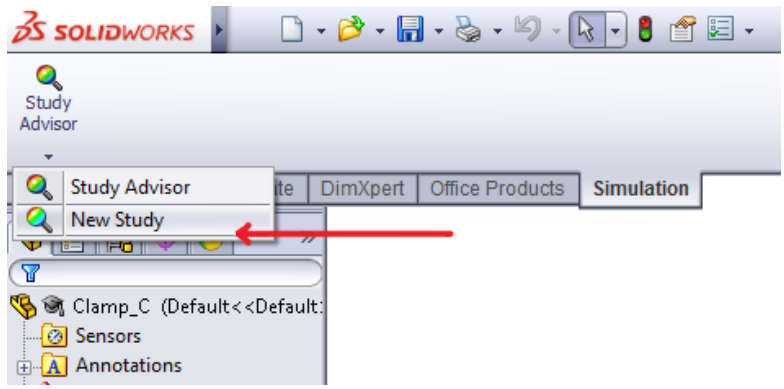

3) Select the static study and name your simulation.

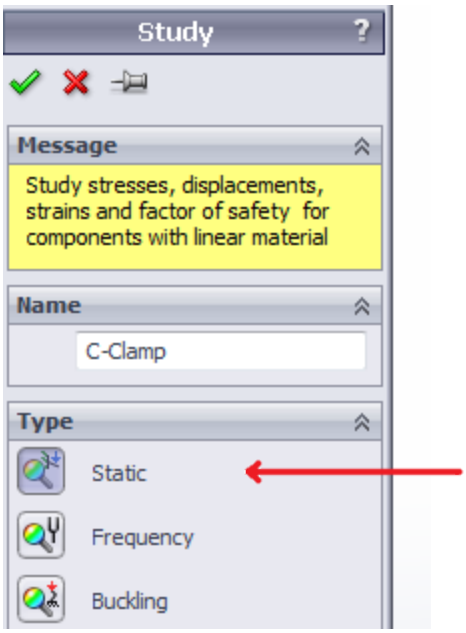

4) Add a fixture to the assembly to keep the part from flying off into space when you apply your loads. This can be done by right clicking the Fixtures section in the properties manager. There are a variety of options to choose from, but for this analysis we will be using the fixed geometry option.

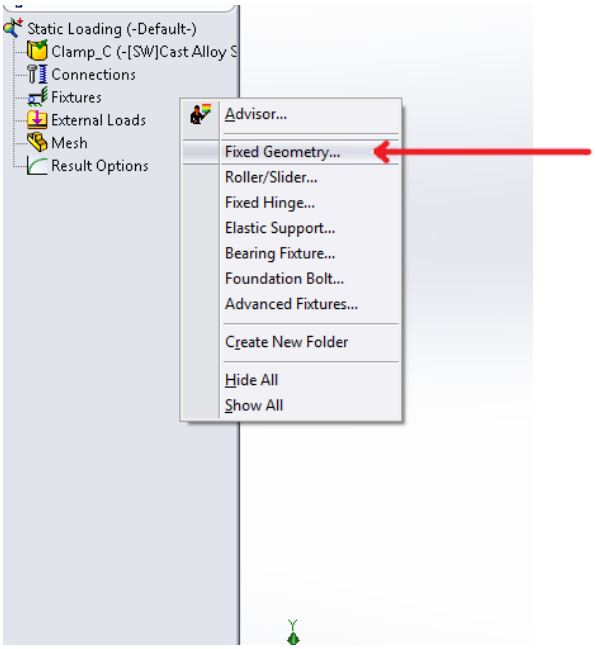

5) This will cause the Fixed Geometry menu to pop up. Select the fixed geometry option and select what face you would like to fix. In this case we selected the top face of the square bolt to remain fixed.

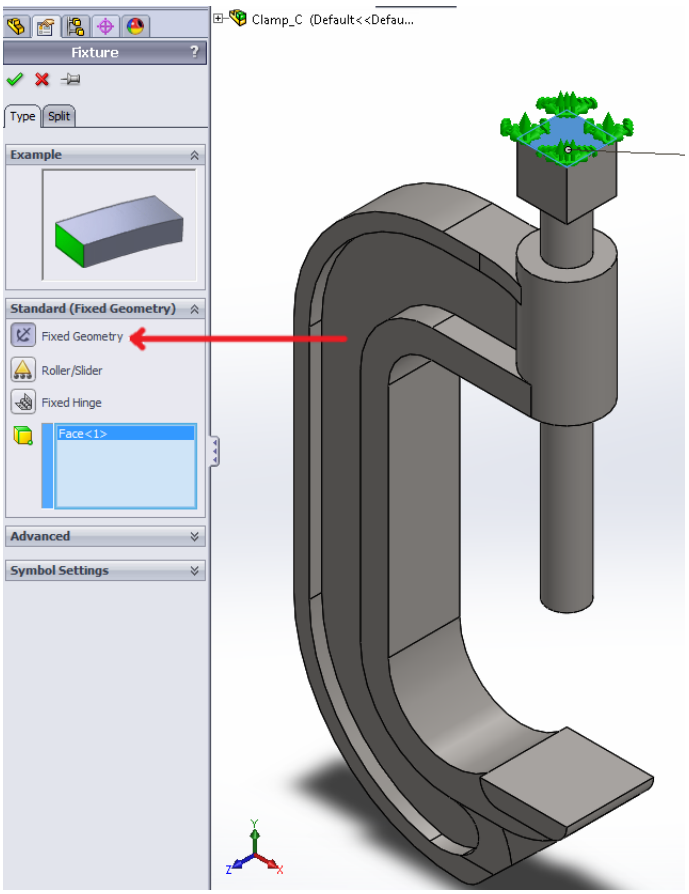

6) Next we need to apply the loads specified in the problem statement. Right click the External Loads option in the properties manager and select the Force option.

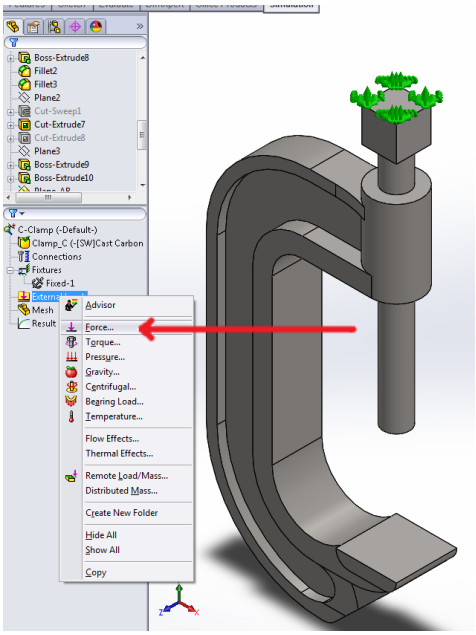

7) This will open the Force/Torque menu. Select the type of load you would like to apply and to which faces it should be applied. In this case we used both the bottom clamping face and the bottom of the bolt. Be sure to specify the unit system you would like to use and direction of the force.

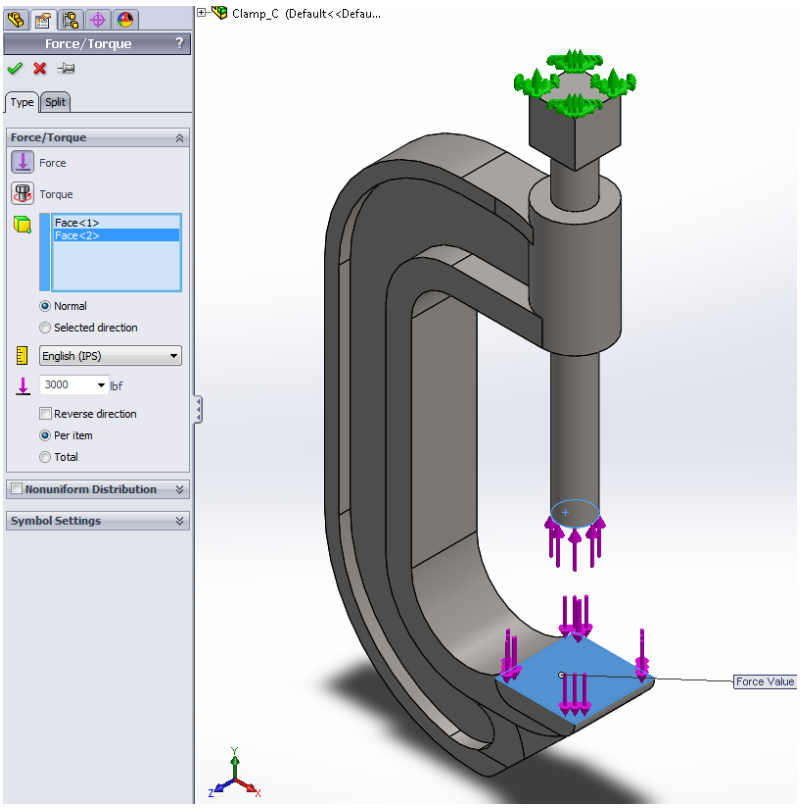

8) Before the simulation can run, a material needs to be specified. You can either go into the model and specify your material, or right click the part name and select Apply/Edit material. Select the desired material and apply it to your assembly.

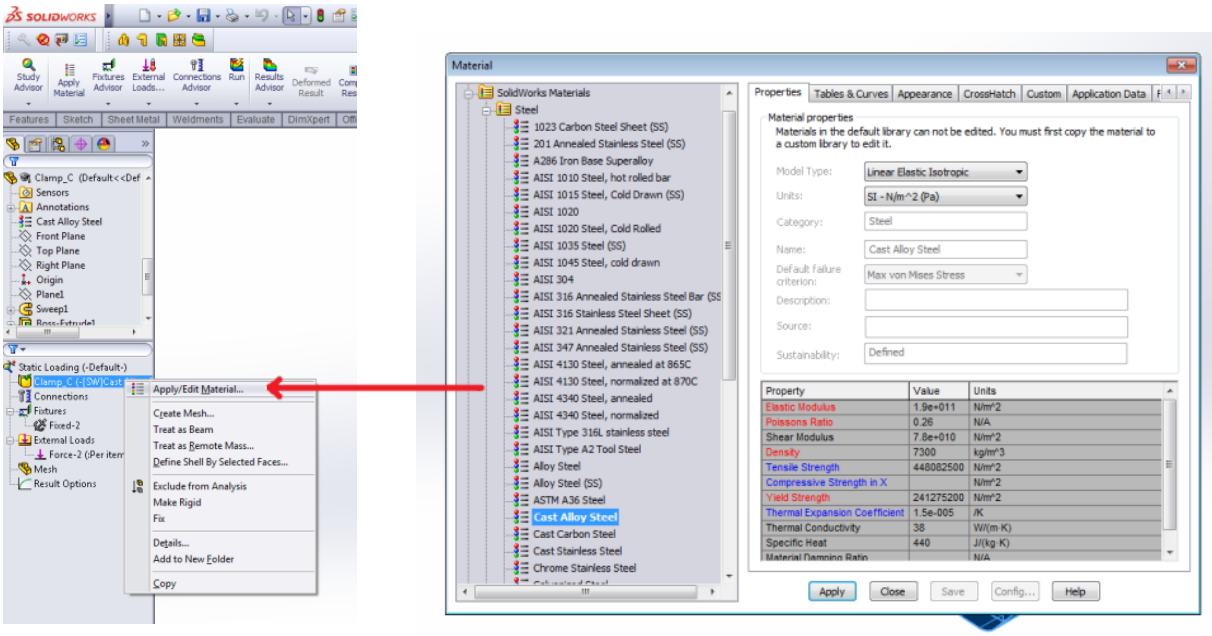

9) Now that a material has been applied, we need to create a mesh in order to run the simulation. To do this, right click the mesh option in the properties manager and select create mesh. Select an appropriate mesh size. Too coarse will not give you accurate enough results to properly analyze the problem.

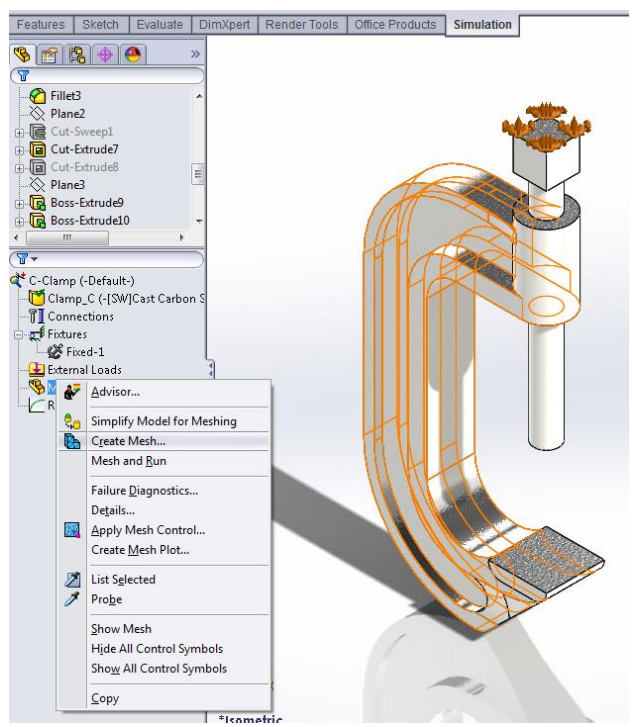

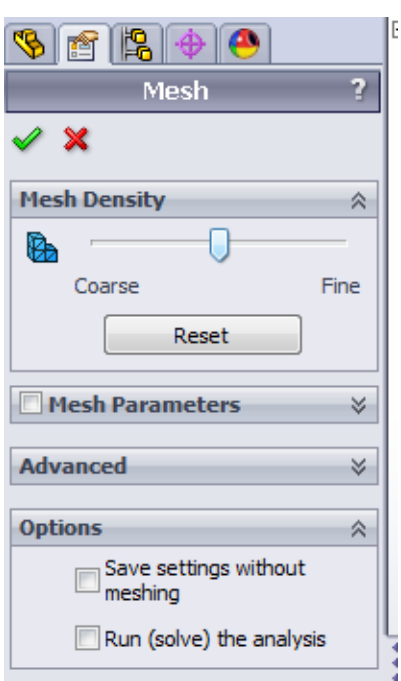

10) Once you have selected and appropriate mesh and applied it. It's time to run your simulation. To do this, you will need to select the run button in the Simulation Toolbar along the top of your SolidWorks. Select Run and wait for the data to compile.

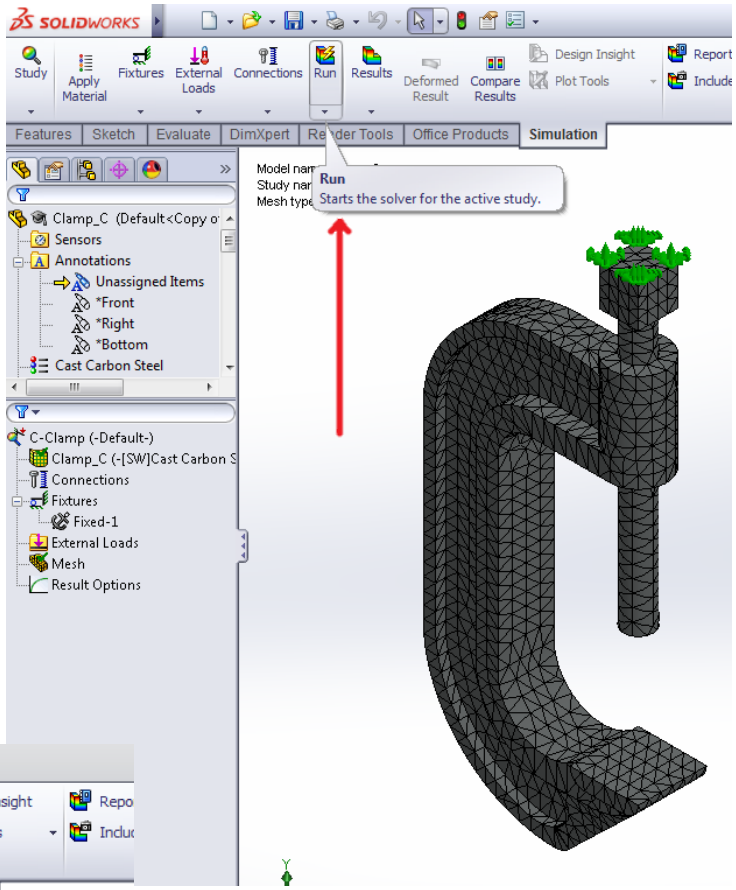

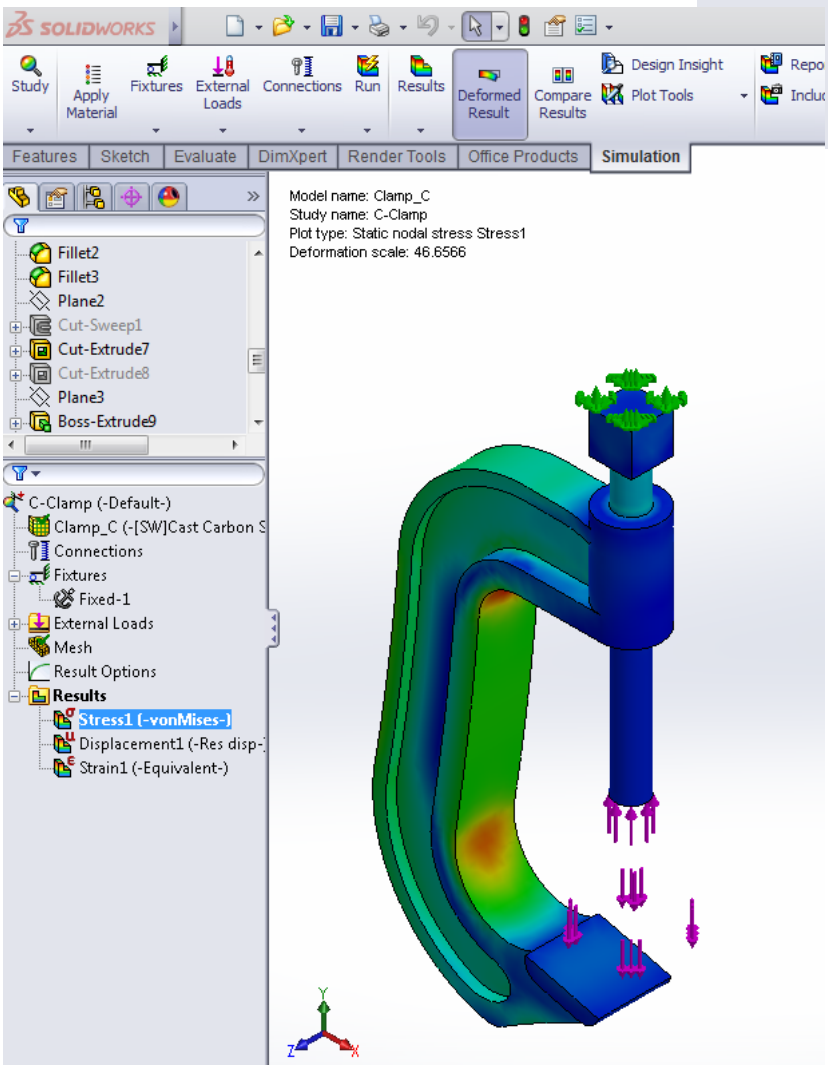

11) Your result should appear once the simulation has been completed.

12) In order to analyze our results we must make sure that the stress results are in the right form. The default SolidWorks stress result will be the von Mises stress. For our analysis we want to take a look at the Y-normal stress. To change the stress state, right click on the stress tab and select the Edit Definition tab.

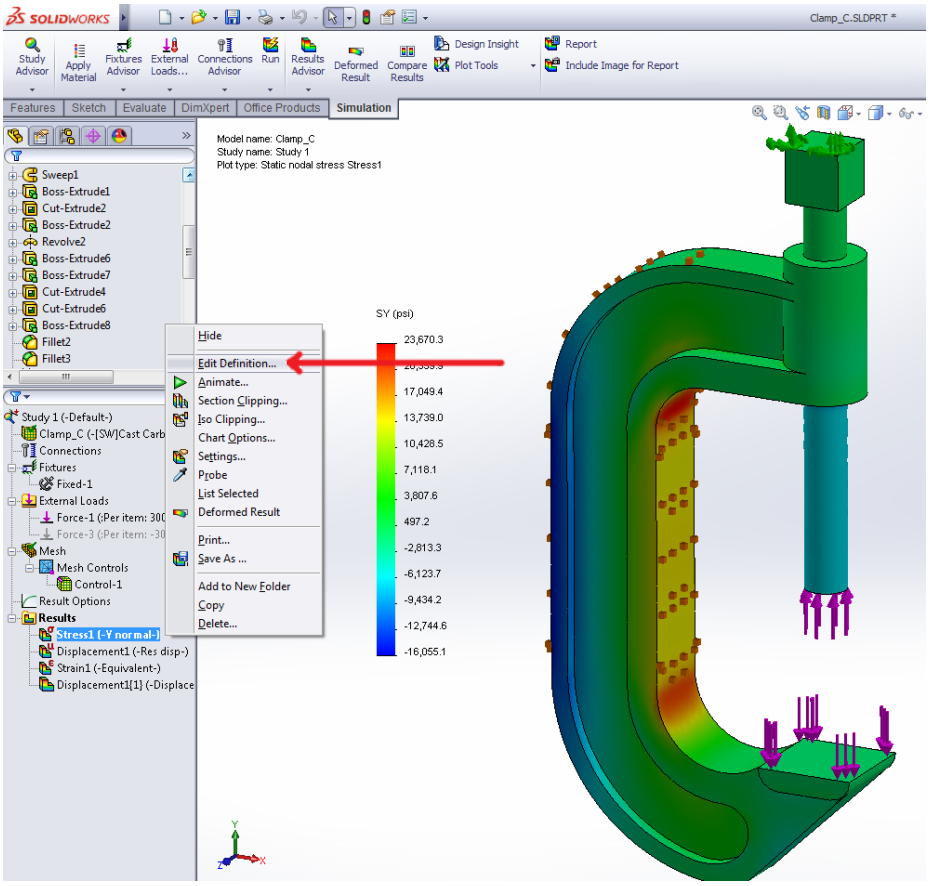

13) When the stress plot window opens up, under the display drop down, select the "SY: Y-Normal Stress" option. Also make sure that the units you are working in match the results that you are looking for; in this example, psi.

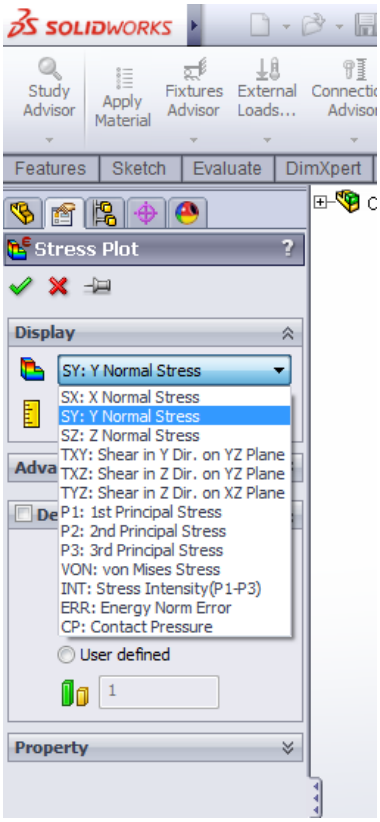

14) In order to determine the stress at a specific point on the model you must use the probe function. This is found under the plot tools drop down menu on the main feature toolbar in the simulations tab.

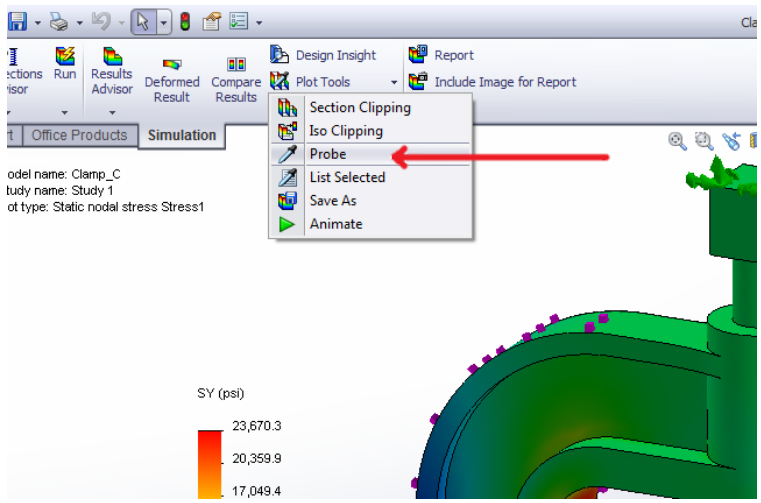

15) Once the probe function has been selected and the feature toolbar has been opened, you are now able to select the points that you wish to view the stress. By clicking on the face on the model at the specific location that you are interested in, it will display the local stress at that point.

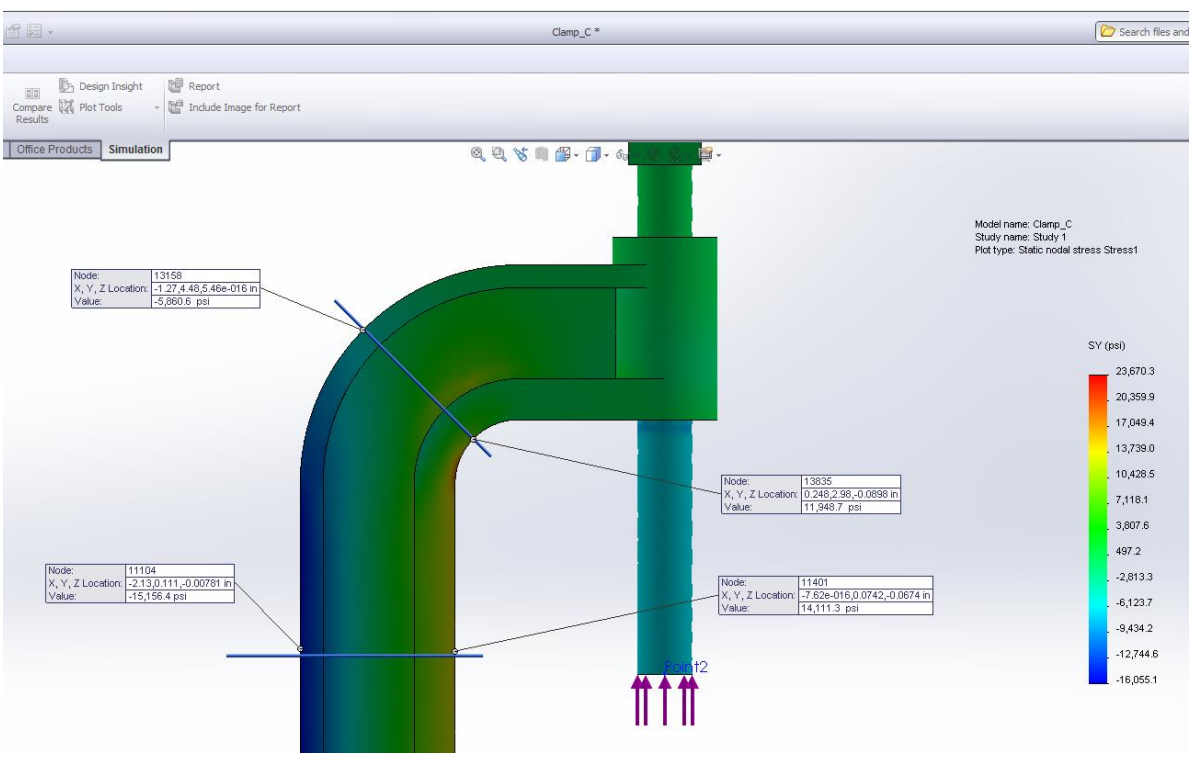

Analysis of Results:

The solution to the problem solved in SolidWorks FEA and TK Solver can be seen in the table below:

	SoildWorks FEA Stress (psi)	TK Solver Stress (psi)
Section AB Inner Surface	14111.3	14227.5
Section AB Outer Surface	-15156.4	-15054.8
Section DE Inner Surface	11948.7	18408.7
Section DE Outer Surface	-5860.6	-9879.8

By comparing the results of the SoildWorks FEA and the TK Solver Analysis we are able to notice some similarities and differences. We can see from the section AB (straight surface section) stresses, that the two methods produce answers that are very close to each other. The analysis on section DE (curved surface section) however, produces answers that are not similar. The difference in these answers could be due to an unforeseen stress concentration that occurs on the curved surface of the solid model within SolidWorks.