Step Shaft Design Analysis

Shigley Problem 18-20

1. Obtain step shaft assembly from the shared drive, this assembly should include the step shaft and two bearing supports with constraints already provided.

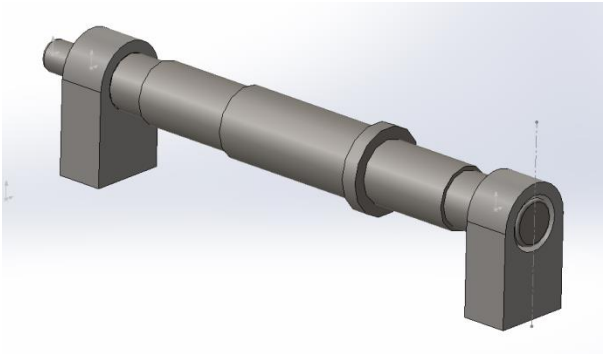

2. To begin the analysis, load SolidWorks simulation by navigating to the office products tab or loading it through the Add-in menu in the tools drop down box.

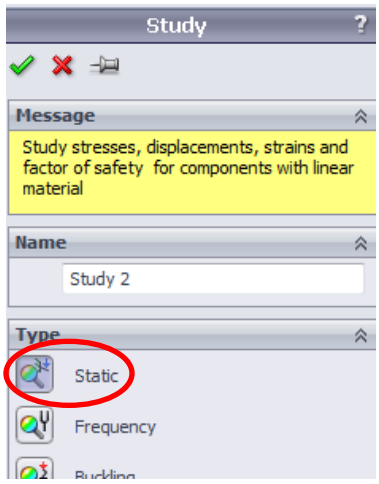

Begin a New Simulation

3. Begin a new simulation by selecting the down arrow under the study advisor tab and clicking on "New Study". Since our study is just going to deal with a static loading looking into the failure of the shaft, simply select static and click the green check mark, this will begin the study.

Setting Up Connections

4. Since we have an assembly, we must set up connections rather than fixtures so SolidWorks knows how the parts interact with each other. To do this, right click on the connections menu in the simulation tree on the left side of

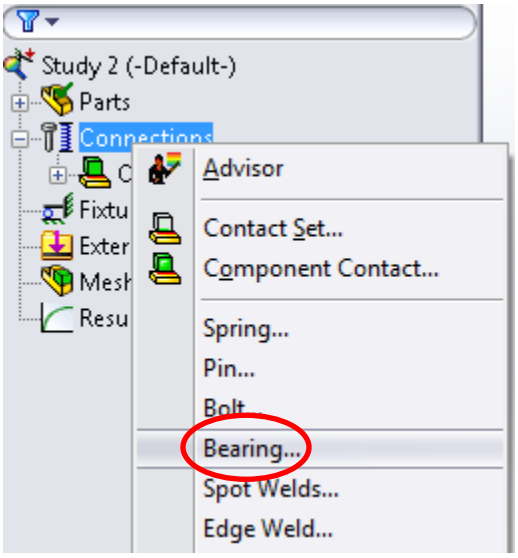

the screen. Select Bearing. This will bring up the connector bearing menu. It first asks for the surfaces which the bearings will be interacting with. To set this, first select the face on the shaft that lines up with the bearing holder then select the inside surface of the bearing holder for its second face. Deselect “Allow Self-Alignment”. Select okay, repeat for the other side of the shaft.

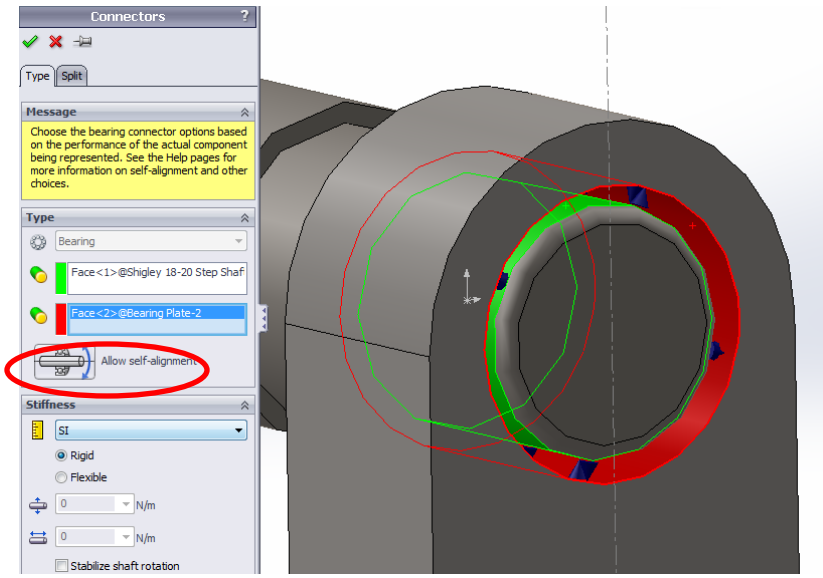

Using Fixtures

5. Next place a fixed geometry fixture on the bottom of each of the bearing holders, this will tell SolidWorks that these must remain in place throughout the simulation and insure that the part does not fly downwards when running. To do this, right click on the fixtures menu in the simulation tree and select fixed geometry. Fix the two bottom surfaces of the bearing supports in the x, y, and z direction.

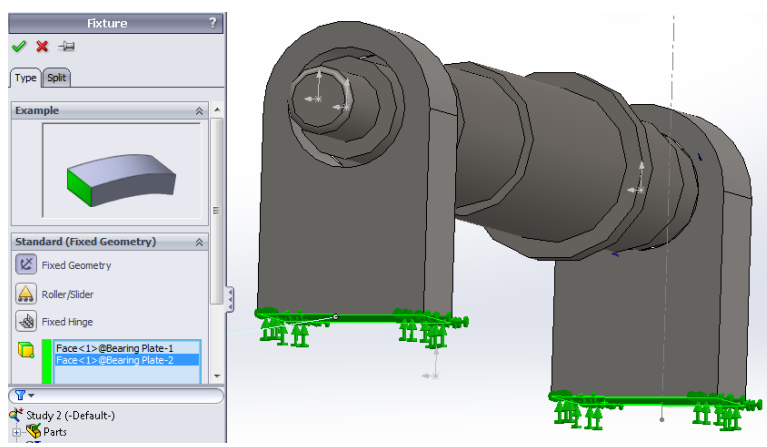

Applying External Loads

6. The problem statement calls for a 7kN force applied to the center of the shaft. To apply the load right click on the external loads menu in the simulation tree and define a force. The acting face will be the large face in the center of the shaft with the diameter of 45mm. SolidWorks default is set to apply a force perpendicular to the face it is acting upon so when we select our face we get

a concentric force. This works fine if you have a flat plate, however, with a round shaft it wants to load it as if a press fit has occurred and all of the force is in the direction of the center of the shaft. To define a direction, highlight “Select Direction” in the force menu. It now asks for a direction in which to apply the load. Select the centerline located on one side of the shaft to define a downward direction. Change the load to 7kN. The simulation menu and the model should look like the figure.

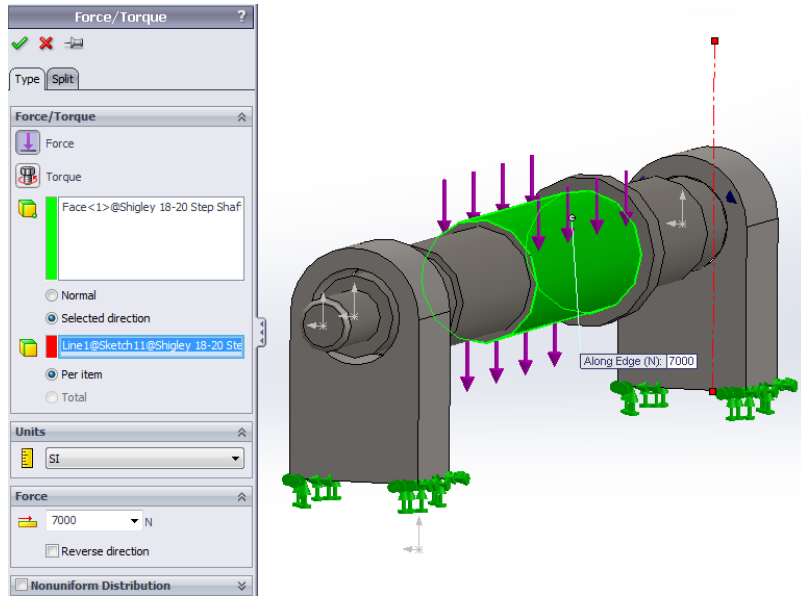

7. The problem also calls for a torque to be applied to the shaft. For the true simulation of the shaft in question, it would difficult to load it as it would be in real life. In the book drawing there are two key ways built into the shaft were the shaft would be connected and the torque be transmitted. In order to simulate this situation, we will simply apply the torque to the faces in question. To apply a torque right click on the external loads menu in the simulation tree, select torque. SolidWorks asks for three things, the face upon which the torque is applied, the direction the torque is applied in, and the magnitude of the torque. First select the smallest diameter that is hanging out of

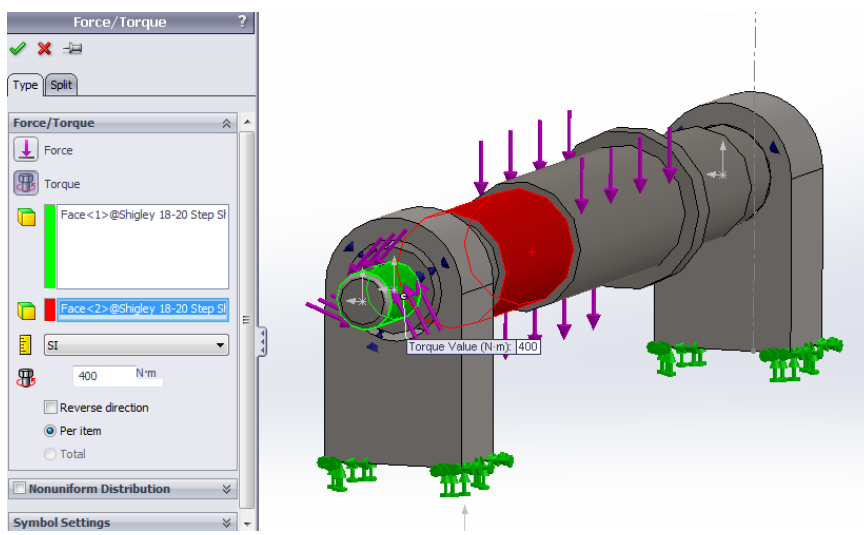

one side of the bearing. SolidWorks now asks for an axis, just select another step in the shaft. Change the magnitude to 400N. Your model should look like the figure.

8. If the simulation was run now, the model would not solve since there is nothing to counter the torque that was just applied. To solve this, repeat step 7 only select the large, major diameter and select reverse direction when setting up the load. We select this diameter since in the book it shows there is another keyway on this step. This should counter the torque set up in step 7 and bring the model back to static equilibrium.

Your model and simulation tree should look like the figures shown below.

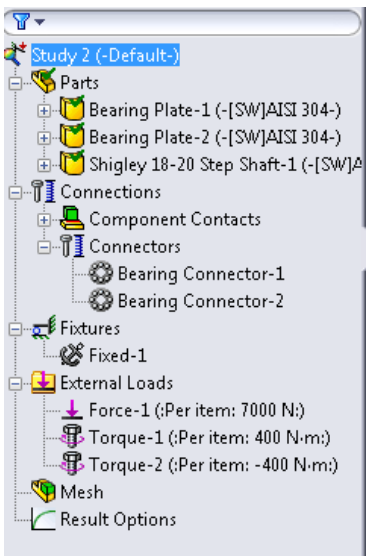

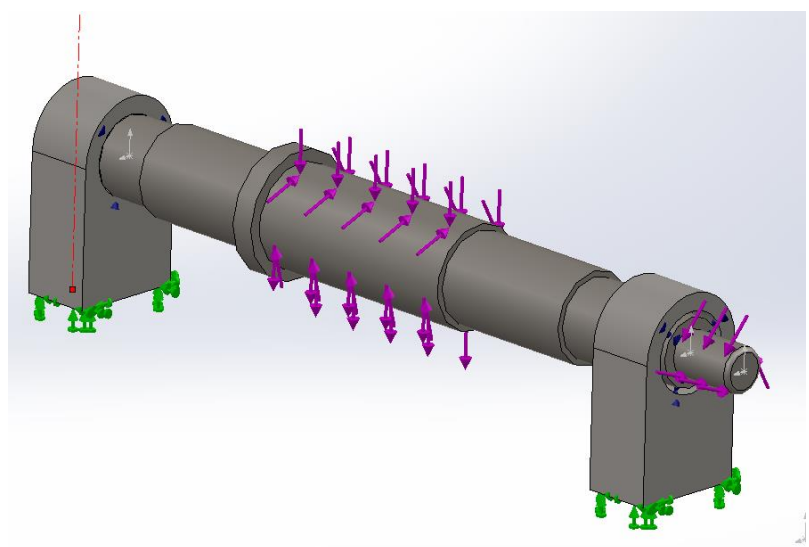

Generating a Mesh

9. A mesh must now be generated. To do this, right click on the mesh menu and create a mesh. Set the mesh size and then select okay. (Note: Because of the way SolidWorks runs its simulations with connectors, it is necessary to have an adequate mesh size. If the mesh is too small the simulation will fail because there are not enough data points in the interaction for it to run successfully. If you are having trouble, set the mesh to a finer size. However, if the mesh is set too fine, the time to run the simulation will be increased.

10. The model is now properly defined and a simulation can occur. In the ribbon, select run.