4 Bar Linkage Analysis

This tutorial explores the motion of a 4-bar linkage. It explores how to model components in the linkage system, properly assemble the linkage and create an animation of the system that analyzes the motion of the links over time.

Step 1: Create the Linkages

A four bar linkage has 4 main components. These include the ground, crank, coupler, and rocker. The ground linkage is connected to the crank and rocker. The coupler linkage is attached to the crank and rocker. In order for the linkage to work, the sum of the shortest and longest link must be less than the sum of the remaining links. Model the 4 different links in Solid Works and extrude to a width of 0.5 in. The linkages are shown below.

Rocker Linkage

(Black)

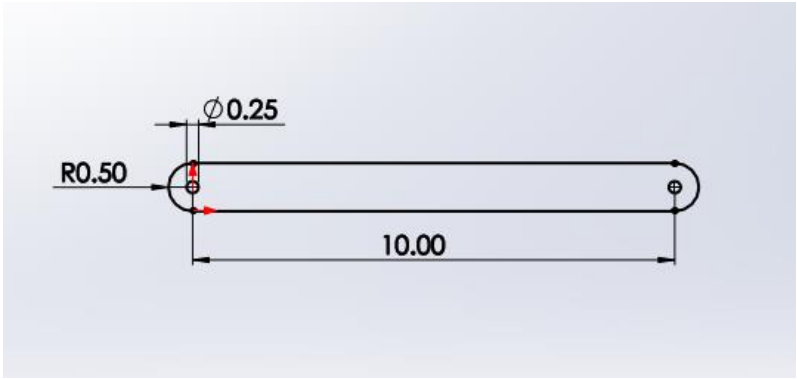

Crank Linkage

(Yellow)

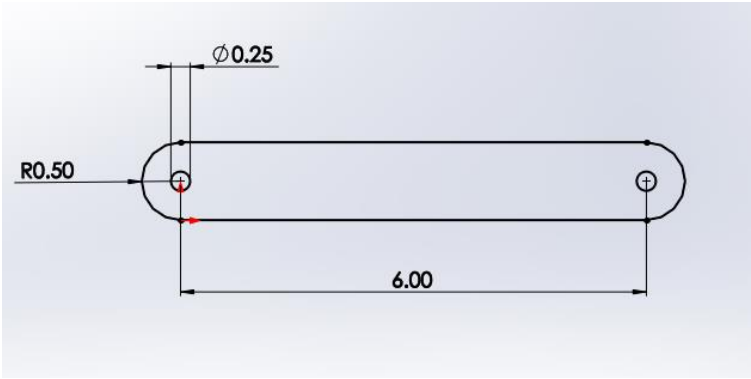

Coupler Linkage

(Green)

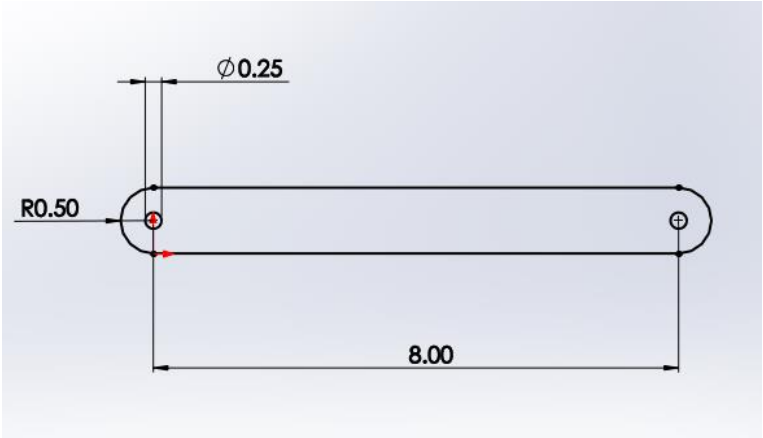

Ground Linkage

(Teal)

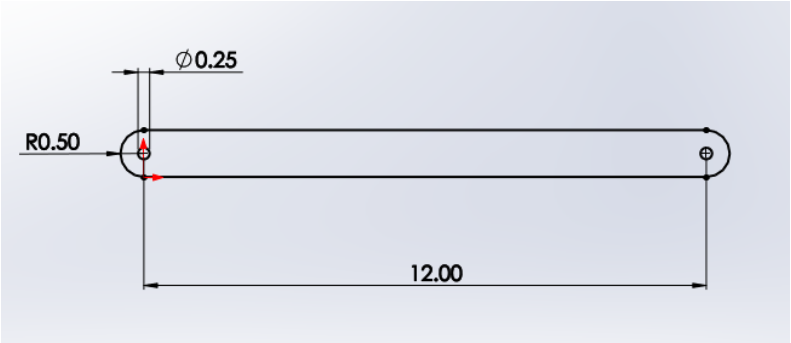

A pin (pink) will also be modeled to be placed between the coupler and rocker linkage to help in tracking the motion of the linkages. The pin has a diameter of 0.25 in and a length of 1.5 in.

Step 2: Create an Assembly

- Create a new assembly with the linkages. Bring in the ground linkage and mate it with the assembly origin. This is critical so the ground will not move as the linkage is animated.

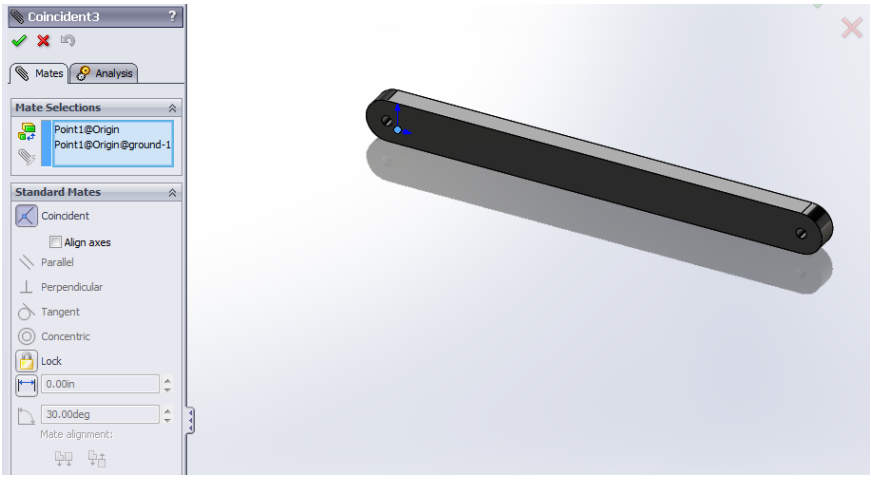

- Mate the remaining linkages with the following mates:
    - Coincident and Concentric: Crank and Ground
        - Mate the front crank face coincident to the back ground face
    - Coincident and Concentric: Crank and Coupler
        - Mate the front coupler face to coincident to the back crank face
    - Coincident and Concentric: Coupler and Rocker
        - Mate the front coupler face to coincident to the back rocker face
    - Coincident and Concentric: Rocker and Ground
        - Mate the front rocker face to coincident to the back ground face

  When the mates are complete, the linkages should be in line and not overlapping when the crank is horizontal.

Complete Assembly- Expanded

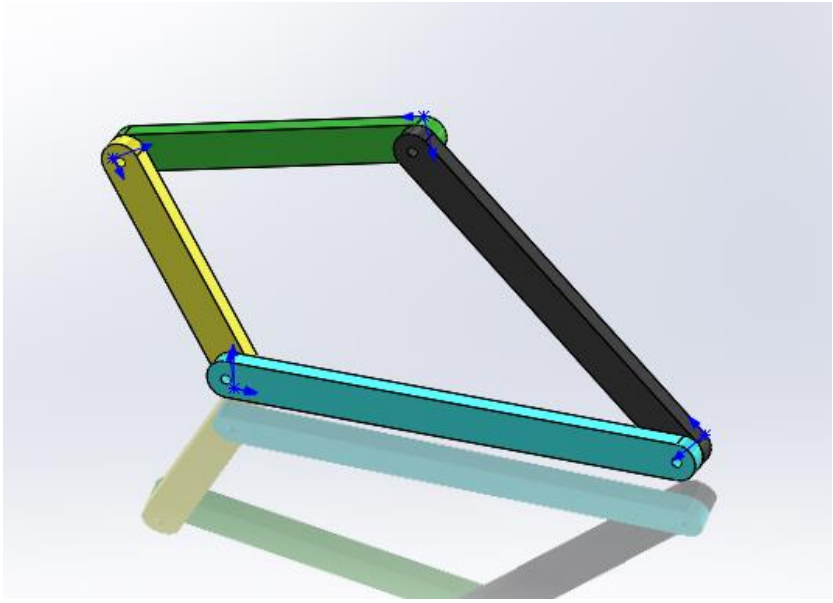

Complete Assembly-Compressed

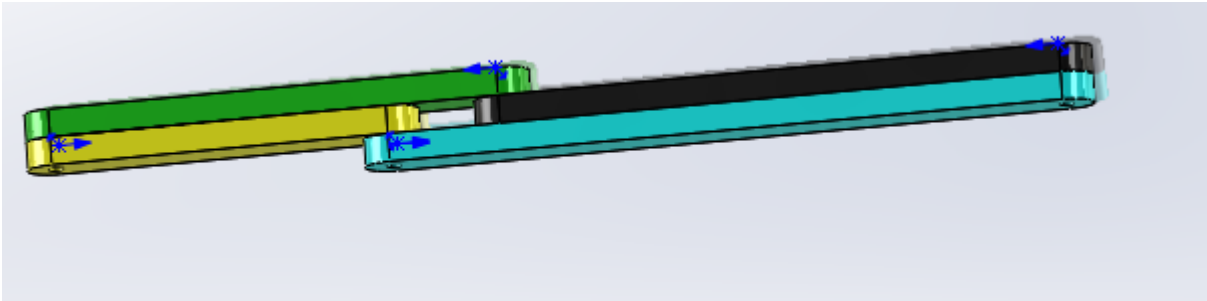

Lastly, place the pin in the model to be concentric with the coupler and rocker linkages. Place a distance mate on the front end of the pin and the front of the rocker linkage to be .25 in. The complete linkage set is shown below.

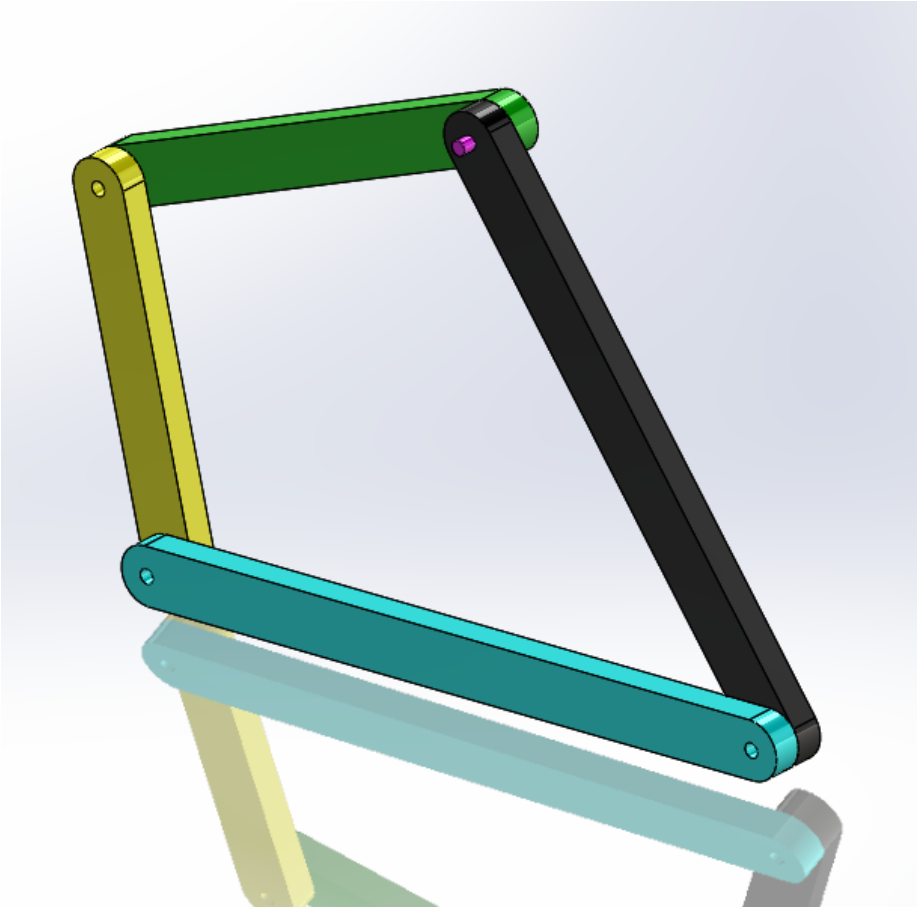

Step 3: Create an Animation

In order to create the animation study, ensure that the SolidWorks Motion Add-In is selected. This can be found through Tools-> Add-Ins.

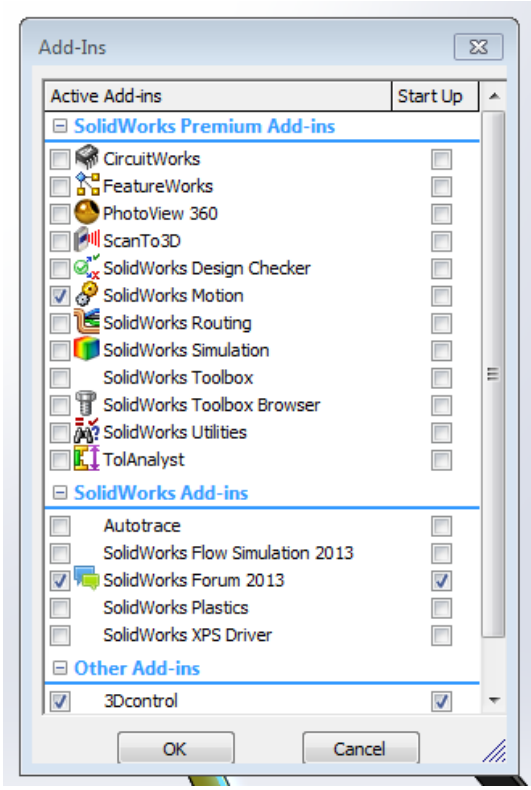

Under the Motion Study Tab 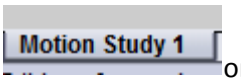

on the bottom tool bar, the animation study will appear. The upper right hand corner will have a drop down menu. Select Motion Analysis. In order to rotate the linkage, a rotary motor will be applied. Select the rotary motor on the top Animation icon bar.

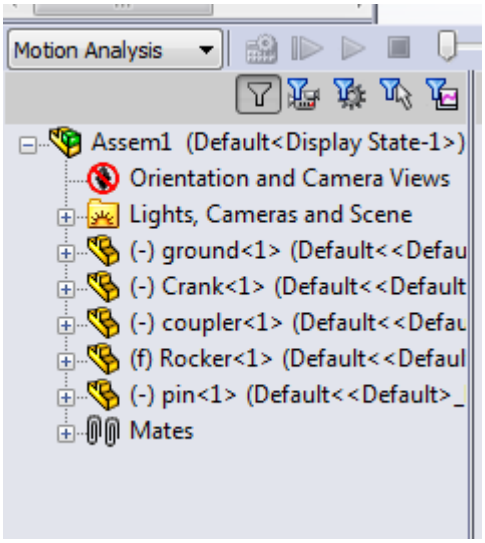

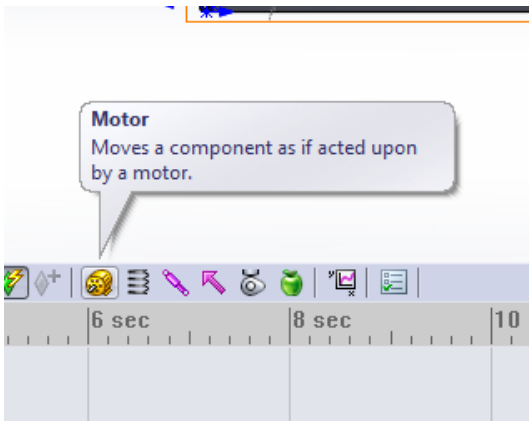

Apply the motor to the ground link hole that connects the crank to the ground linkage. Change the motor speed to 50 RPM. Select the ground link as the component to move relative to.

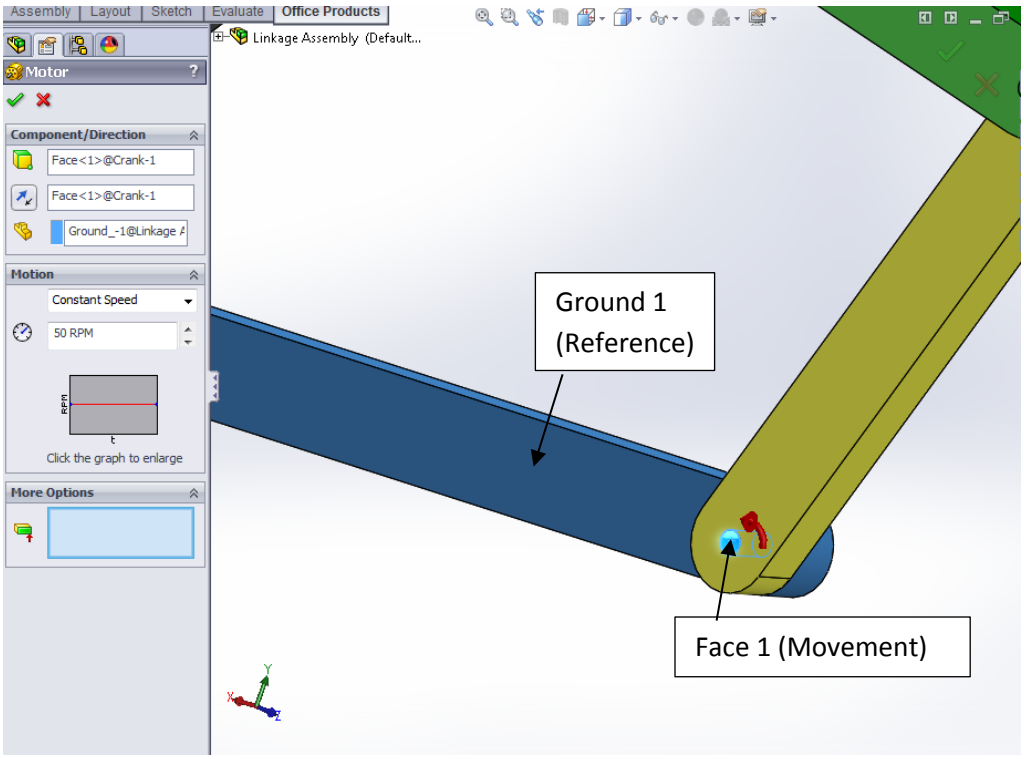

Make sure the motion analysis tab is currently highlighted on the drop down menu. On the motion toolbar, click the calculate button to update the changes made to the motor. Drag the time bar and the motor length to 10 seconds so the full rotation of the linkage can be seen.

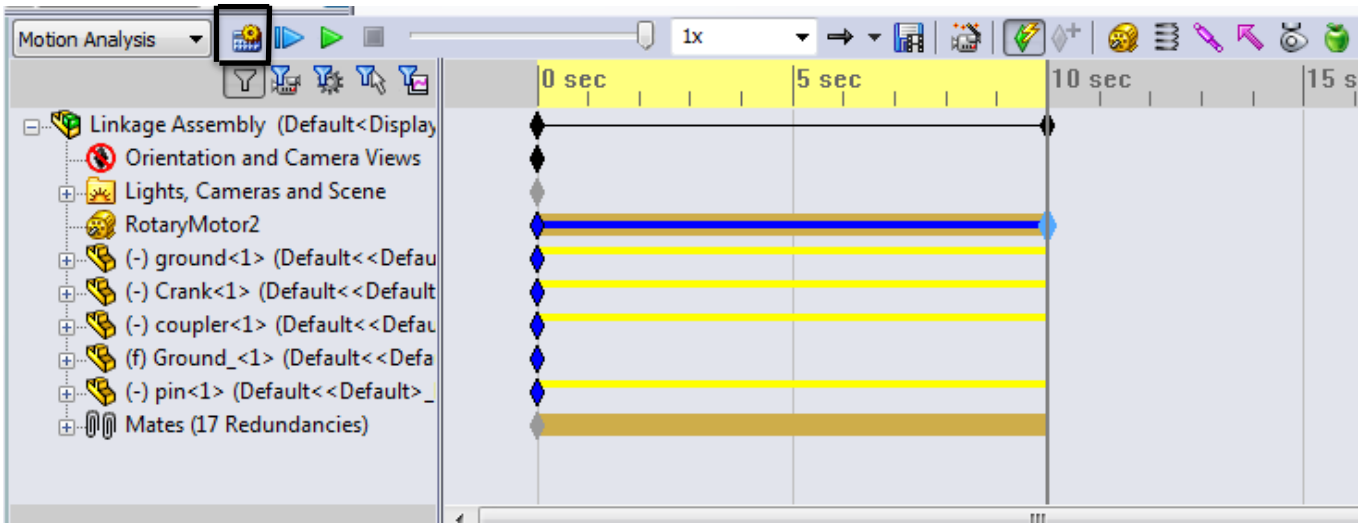

Clicking on the green arrow will start the animation from the start.

Step 4: Motion Analysis

The pin was created in the assembly to track the motion of the linkages. A plot will be created to see the motion. Click on the results and plots button in the motion analysis toolbar.

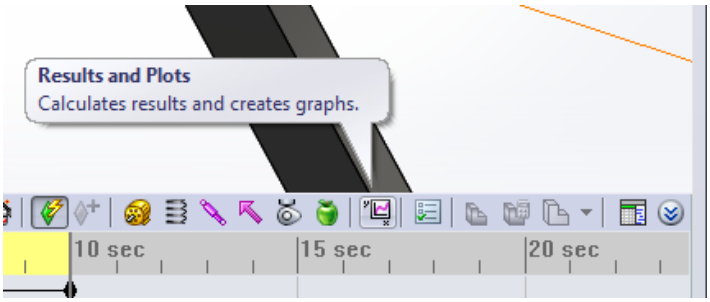

The plot/results menu will appear. Click on the pin to make it the focus of the study. From the top drop down menus, select Displacement/Velocity/Acceleration, Center of Mass Position, and X Component. A new plot will now be created from the motion study showing the x position of the pin versus time.

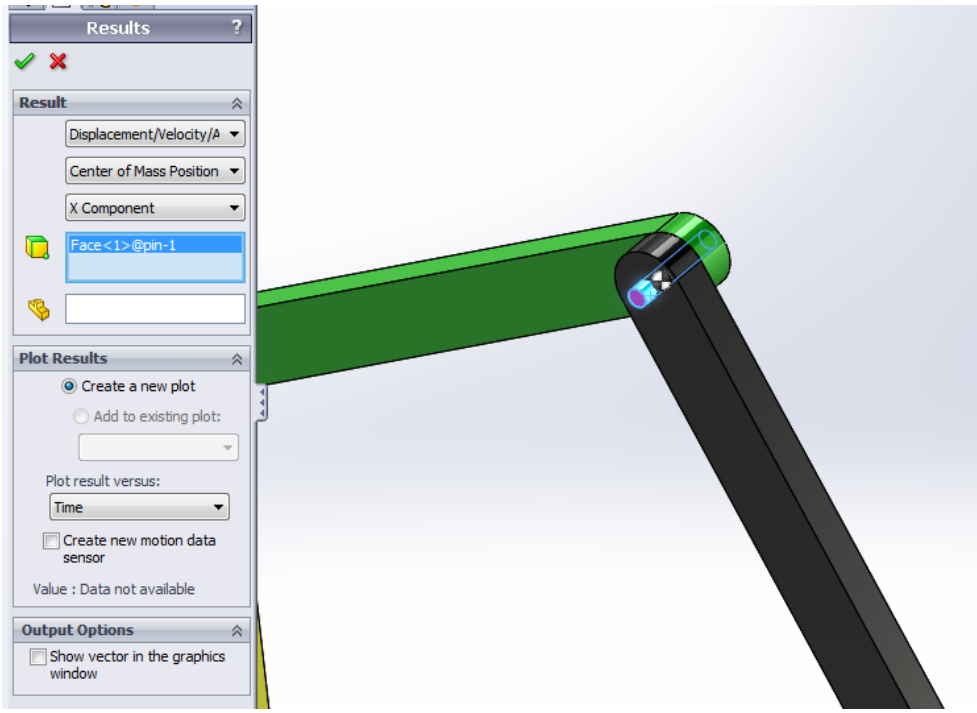

A plot of the x position of the pin versus time should appear after running through the animation. If it does not appear, right click the results under the Motion Analysis Design Tree and select Show All Plots. When the green arrow goes through the animation, a red line will follow the plot so the motion can be tracked.

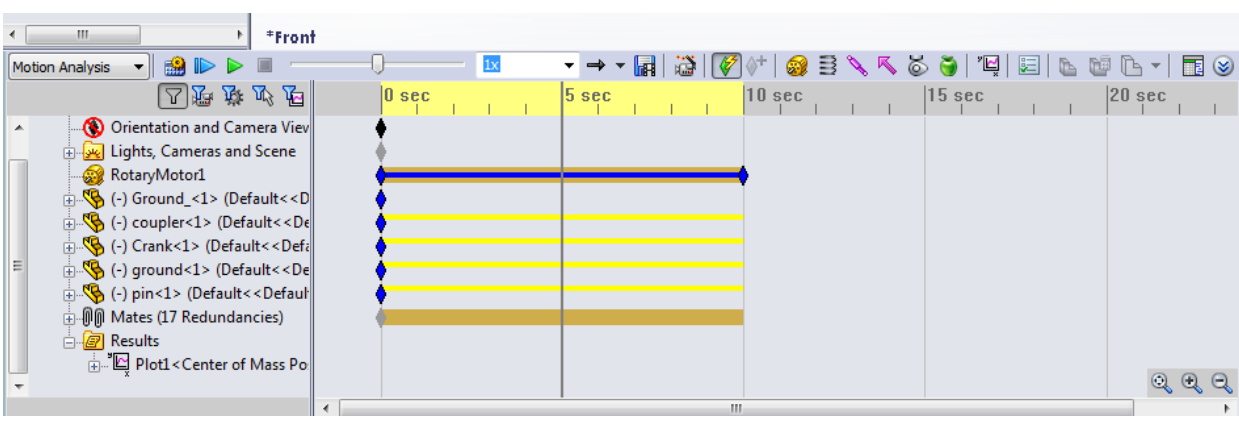

X Component of Motion v. Time

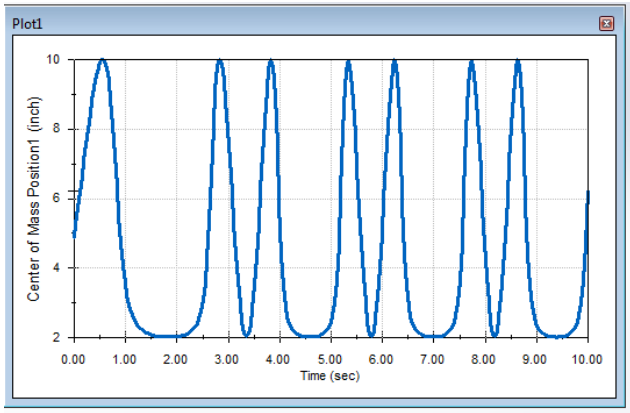

The plots can also be used to show the changing Y and Z position of the pin. Simply right click the plot under the Results and edit the feature. Under the 3rd drop down menu, the component can be changed.

Y Component of Motion v. Time

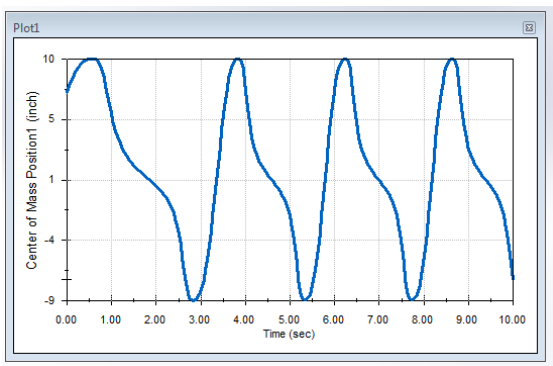

Z Component of Motion v. Time

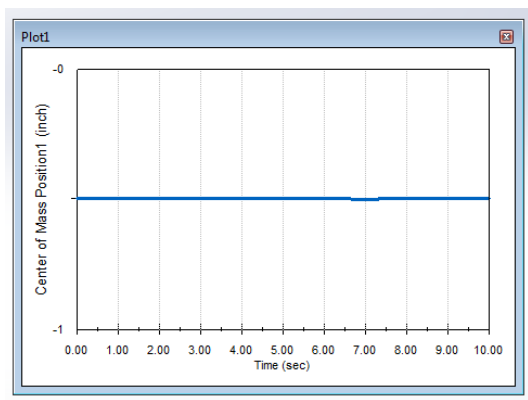

Note: The pin's position is dependent on how the assembly is related to the origin. This is why the ground link was mated to the origin of the assembly. This explains why the Z component has a constant position as the linkage is only moving in the X and Y Direction.