CE 342

Vertical and Lateral Load Paths

UniversityofIdaho

Load Path

- The engineer must provide a continuous system of support for every component of a structure and its contents.
- The support must:
  - Begin at the point where the load is applied, and
  - Continue to the foundation.
- This is known as the load path.

UniversityofIdaho

2

Example

- Consider a water bed in a typical student apartment.
- In wood framed construction, the waterbed is immediately supported by the plywood sheet below the flooring.

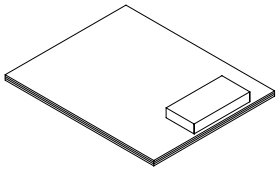

UniversityofIdaho

3

Joists

- The plywood is supported by floor joists.

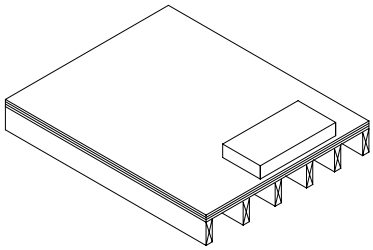

UniversityofIdaho

4

Walls

- The joists are supported by bearing walls and/or beams and columns.

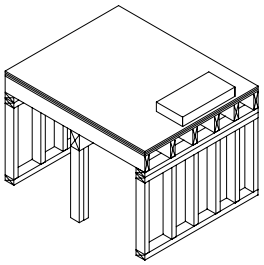

Foundation

- The walls and columns are supported by a spread-footing foundation.

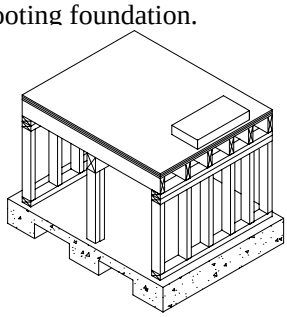

Vertical Load Path

- The various components provide a continuous load path for the vertical load (the water bed) down to the foundation.
- Many situations will be more complicated, but a continuous load path is always needed from load to foundation.

Lateral Load Path

- Lateral loads such as wind and earthquake forces must also have a path from the point of application of the load to the foundation.
- We will focus on wind loads because they are easier to visualize.
  - We can also avoid the dynamic response of the structure – i.e., the interaction between the wind and the structure.

Lateral Force Resisting System

- There are a wide variety of lateral force resisting systems:
  - Cross-braced frames (steel).
  - Shear walls (concrete, plywood).
  - Moment resisting frames (steel or concrete).
- For purposes of this discussion, we will focus on cross-braced steel frames.
  - Many of the concepts are very similar for shear wall systems.

Example

- Consider a wind load applied to a cross-braced steel frame building.

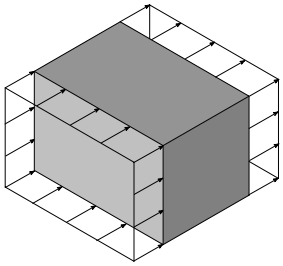

Cladding

- The wind pressure is applied directly to the exterior cladding.

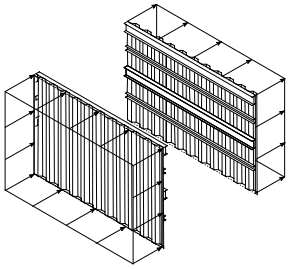

Girts

- The metal cladding is supported by beams at the floor and roof levels and by girts between floors.

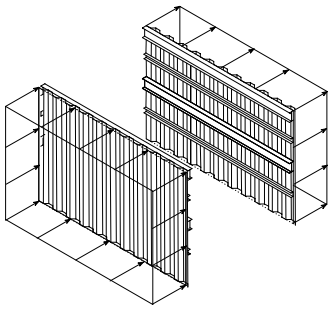

Beams and Columns

- And the girts and beams are supported by beams and columns

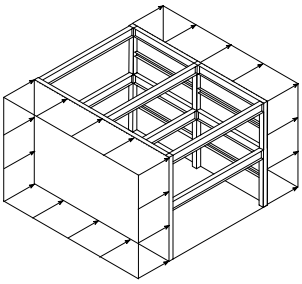

Cross Bracing

- In steel construction such as this, pinned connections are much more economical and thus much more common. Therefore cross bracing is provided to resist lateral loads.

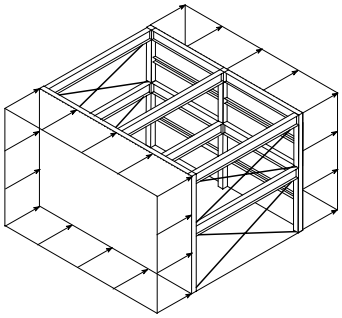

Vertical Truss

- The cross bracing allows the end frames to act as a vertical truss resisting the lateral loads.

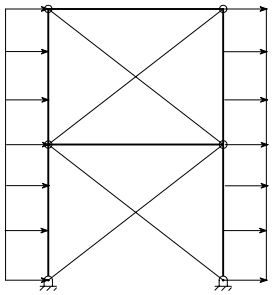

Horizontal Bracing

- It isn't practical to include bracing in the center frame, so horizontal bracing is added to the roof and floor to transfer the lateral loads to the end frames

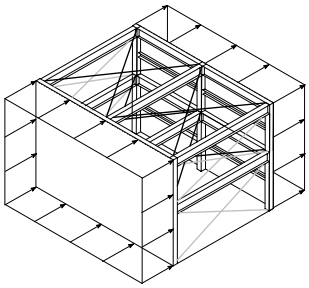

Horizontal "Truss"

- The horizontal bracing makes the roof and floor levels act like horizontal trusses.

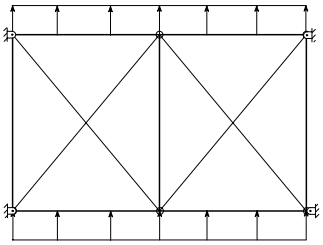

Plan View

Diaphragms

- If the roof and floor were, say, reinforced concrete slabs on metal decks, we might omit the horizontal bracing and design the roof/floor as a diaphragm.
- A diaphragm is, essentially, a huge, deep but very thin beam.

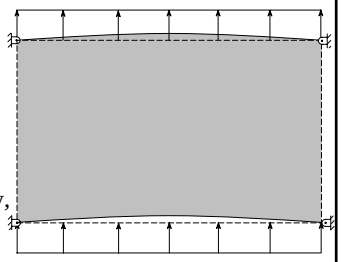

Orthogonal Direction

- Lateral bracing must also be provided in the other direction.
- For economy and convenience, bracing is only added in one bay on each side.

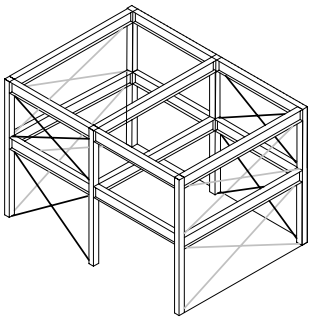

Asymmetric Bracing

- If the bracing isn't symmetric, the lateral loads generate torsional moments in addition to the horizontal shear.

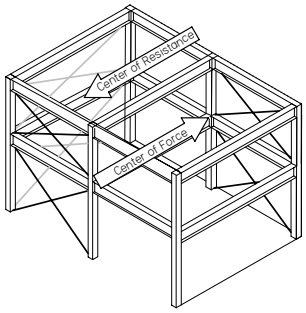

Summary & Conclusions

- A complete load path must be provided for both vertical and horizontal loads.
  - The load path can be fairly complicated even for simple structures.
- The load path must be understood in order to determine tributary areas for, i.e., the portion of the load assigned to each member.

University of Idaho

21